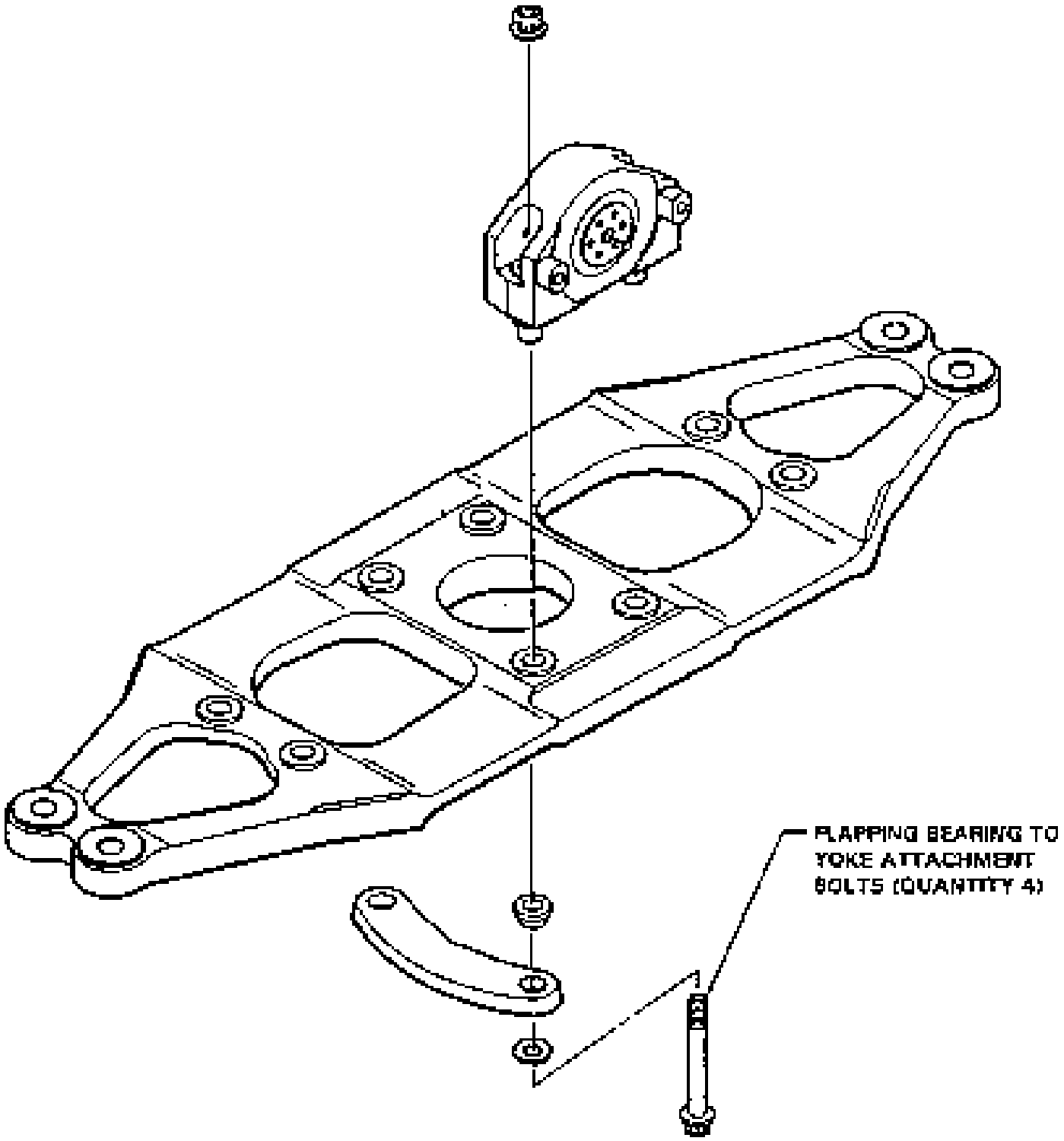

MAIN ROTOR HUB

FIGURE 1