CHANGE

U.S. DEPARTMENT OF TRANSPORTATION
FEDERAL AVIATION ADMINISTRATION

8260.19C CHG 3

7/14/03

SUBJ: FLIGHT PROCEDURES AND AIRSPACE

1. PURPOSE. This change transmits revised pages to Order 8260.19C, Flight Procedures and Airspace.

2. DISTRIBUTION. This order is distributed in Washington headquarters to the branch level in the Offices of System Safety; Aviation Policy and Plans; Air Traffic Systems Development; Aviation Research; Communications, Navigation, and Surveillance Systems; Airport Safety and Standards; to Flight Standards, Air Traffic, and Airway Facilities Services; to the Aeronautical Information Division (ATA-100); the National Aeronautical Charting Office (AVN-500); to the National Flight Procedures Office (AVN-100), the National Airway Systems Engineering and the Regulatory Standards Divisions at the Mike Monroney Aeronautical Center; to the branch level in the regional Flight Standards, Air Traffic, Airway Facilities, and Airports Divisions; to all Flight Inspection Offices; International Flight Inspection Office; the Europe, Africa, and Middle East Area Office; to all Flight Standards and Airway Facilities Field Offices; special mailing list ZVN-826; and Special Military and Public Addressees.

3. EFFECTIVE DATE. September 1, 2003

4. EXPLANATION OF CHANGES. Reference to National Ocean Service (NOS) is changed to reflect the National Aeronautical Charting Office (NACO), where applicable. The term Standard Instrument Departure (SID) is re-introduced where applicable to support the formal re-introduction of the term FAA-wide on February 20, 2003. Chapters 8 and 9 have been rewritten and combined into Chapter 8 to consolidate forms completion instructions and to reflect organizational changes and reassignment of responsibilities for the Flight Standards Service and the Aviation System Standards (AVN). Policy and responsibilities are also revised to reflect current policy and terminal instrument procedures (TERPS) instruction letters. Significant areas of new direction, guidance, and policy included in this change are as follows:

a. Chapter 1.

(1) Paragraph 105. Adds new terms and definitions.

(2) Paragraph 113d. Adds the new office in AVN (National Aeronautical Charting Office (NACO)) that is responsible for the production and distribution of aeronautical charts and related products.

b. Chapter 2.

(1) Paragraph 216b(10)(b). Modifies this paragraph to require AVN-160 to provide MV values in writing.

(2) Paragraph 221. Eliminates NFDC involvement in initial NOTAM issuance.

(3) Paragraph 222a. Adds policy that P-NOTAMs may not be used for changes to SIAPs.

(4) Paragraph 222b. Clarifies that FDC T-NOTAMs are used for changes to SIAPs, airways, and textual DPs. Also adds policy to use abbreviated 8260-series forms to publish permanent procedure amendments promulgated by T-NOTAMs**.**

(5) Paragraph 223a. Delegates internal guidance for FDC NOTAM preparation, quality control, issuance, cancellation, and follow-up procedures to be jointly developed by AVN-160, ATA-110, and AAT-134 with oversight by AFS-420.

(6) Paragraph 223d. Adds requirement to coordinate all charting errors with ATA-130 to determine appropriate course of action.

(7) Paragraph 224. Eliminates P-NOTAM use for procedure amendments in favor of T-NOTAMs followed by submission of appropriate 8260-series form(s).

(8) Paragraph 224b(1). Delegates internal guidance for NOTAM D transmittal, quality control, tracking, and cancellation procedures to be jointly developed by AVN-160 and AAT-134 with oversight by AFS-420.

(9) Paragraph 225a. References Order 7930.2, Notices to Airmen (NOTAMs) for example airway NOTAMs.

(10) Paragraph 226d. Examples updated to reflect revised T-NOTAM policy.

(11) Paragraph 263b. Adds information to indicate that established fixes or NAVAIDs should be used, whenever possible, in lieu of creating new fixes.

(12) Paragraph 264a. Changes "criteria" to "policy."

(13) Paragraph 271. Adds information for obtaining obstacle data.

(14) Paragraph 274. Adds policy to include a 200-foot adverse assumption obstacle (AAO) in determining a preliminary controlling obstacle.

(15) Paragraph 274b. Adds policy for missed approach and departure procedure controlling obstacle determination.

(16) Paragraph 275. Changes "criteria" to "policy," and expands paragraph 275a to include airport surveys.

c. Chapter 4.

(1) Section 1, paragraph 404j. Adds the requirement to develop and depict an intermediate segment on all graphically published procedures.

(2) Section 1, paragraph 404aa. Provides guidance for application of military reduced ROC for NDB SIAPs at civil and joint-use airports.

(3) Section 4. New section added to provide policy, guidance, and responsibilities for processing Special Instrument Procedures**.**

(4) Section 7. Deletes this section and refers to Order 8260.46, Departure (DP) Program, for initiating, processing, developing, and managing the DP program.

(5) Section 9. New section added to provide supplementary guidance for the development of area navigation (RNAV) (Global Positioning System (GPS)) instrument procedures.

d. Chapter 5.

(1) Paragraph 504b. Provides clarification that a 300-foot buffer is included in the airspace computation examples.

(2) Paragraph 507c(1). Expands guidance to include new technologies and updates guidance to reflect modification made in Order 8260.3B CHG 19, United States Standard for Terminal Instrument Procedures (TERPS).

(3) Paragraph 517. Adds policy for restricted areas based on tethered balloons.

e. Chapter 8. Combines chapters 8 and 9 into one chapter, and contains the form use and preparation for various instrument approach procedures.

f. Appendix 1. Updates Flight Procedures references.

g. Appendix 2. Updates information under the National Imaging and Mapping Agency (NIMA).

h. Appendix 3. Deletes the "Directive Feedback Information because it was moved to Chapter 1 under "Information Update." This appendix now contains the Data Worksheet for FAA Form 8260-2.

i. Appendix 4. Updates samples of Form 8260-2, Radio Fix and Holding Data Record.

j. Appendix 5. Updates samples of Form 8260-3, ILS and RNAV Standard Instrument Approach Procedures.

k. Appendix 6. Updates samples of Form 8260-4, Radar – Standard Instrument Approach Procedure.

l. Appendix 7. Updates samples of Form 8260-5, Standard Instrument Approach Procedure.

m. Appendix 8. Updates samples of Form 8260-7, Special Instrument Approach Procedure.

n. Appendix 9. Updates samples of Form 8260-9, Standard Instrument approach Procedure Data Record.

o. Appendix 10. Updates samples of Form 8260-10, Standard Instrument Approach Procedure Continuation Sheet.

p. Appendix 11. Deletes sample of Form 8260-15, and inserts the Final Approach Segment Data Block Data Requirements.

q. Appendix 12. Adds ARINC 424 Database Codes for waypoint description/definitions that are used by navigation database developers.

5. DISPOSITION OF TRANSMITTAL. This transmittal sheet must be retained until it is canceled by a new order.

PAGE CONTROL CHART

REMOVE PAGES	DATED	INSERT PAGES	DATED
1-1 thru 1-2	9/18/98	1-1	9/18/98
1-3 thru 1-4	12/29/99	1-3 thru 1-4	7/14/03
1-5 thru 1-9 (and 10)	9/18/98	1-5 thru 1-9 (and 10)	7/14/03
2-9 thru 2-10	9/18/98	2-9	9/18/98
2-11 thru 2-16	12/29/99	2-10 thru 2-28	7/14/03
2-17 thru 2-20	9/18/98		
2-21	12/29/99		
2-22 thru 2-24	9/18/98		
2-25 thru 2-26	12/29/99		
2-27 thru 2-28	9/18/98		
4-1 thru 4-17 (and 18)	12/29/99	4-1 thru 4-26	7/14/03
5-1 thru 5-8	12/29/99	5-1 thru 5-8	7/14/03
5-15 thru 5-16	12/29/99	5-15 thru 5-16.1 (and 5-16.2)	7/14/03
5-19 thru 5-20	12/29/99	5-19 thru 5-20	7/14/03
8-1 thru 8-22	9/16/93	8-1 thru 8-55 (and 56)	7/14/03
8-23 thru 8-26	12/29/99		
8-27 thru 8-37 (and 38)	9/16/93		
9-1 thru 9-27 (and 28)	9/16/93		
APPENDIX 1	12/29/99	APPENDIX 1	7/14/03
1 thru 5 (and 6)		1 thru 6	
APPENDIX 2	12/29/99	APPENDIX 2	7/14/03
1 thru 5 (and 6)		1 thru 6	
APPENDIX 3	9/16/93	APPENDIX 3	7/14/03
1 thru 2		1 thru 4	
APPENDIX 4	9/16/93	APPENDIX 4	7/14/03
1 thru 13 (and 14		1 thru 12	
APPENDIX 5	9/16/93	APPENDIX 5	7/14/03
1 thru 9 (and 10)		1 thru 8	
APPENDIX 6	9/16/93	APPENDIX 6	7/14/03
1 thru 5 (and 6)		1 thru 4	
APPENDIX 7	9/16/93	APPENDIX 7	7/14/03
1 thru 16		1 thru 6	
APPENDIX 8	9/16/93	APPENDIX 8	7/14/03
1 thru 3 (and 4)		1 thru 6	
APPENDIX 9	9/16/93	APPENDIX 9	7/14/03
1 thru 5 (and 6)		1 thru 12	
APPENDIX 10	9/16/93	APPENDIX 10	7/14/03
1 thru 2		1 thru 4	

PAGE CONTROL CHART

REMOVE PAGES	DATED	INSERT PAGES	DATED
APPENDIX 11 1 thru 3 (and 4)	9/16/93	APPENDIX 11 1 thru 11 (and 12)	7/14/03
		APPENDIX 12 1 thru 5 (and 6)	7/14/03

James J. Ballough
Director, Flight Standards Service

CHAPTER 1. ADMINISTRATIVE

SECTION 1. GENERAL

100. PURPOSE.

This order provides guidance to all FAA personnel for the administration and accomplishment of the FAA Flight Procedures and Airspace Program.

101. DISTRIBUTION.

This order is distributed to offices on special mailing list ZVN-826.

102. CANCELLATION. Order 8260.19B, Flight Procedures and Airspace, dated December 18, 1991, is canceled.

103. EXPLANATION OF CHANGES.

a. Use of maps and charts clarified.

b. Expanded service volume (ESV) distribution modified.

c. Use of Notice to Airmen (NOTAM) system modified.

d. Airway NOTAMs introduced with examples.

e. Periodic (annual) standard instrument approach procedure (SIAP) review interval extended to two years; airway review interval to four years.

f. Instrument Approach Procedures Automation (IAPA) procedure development and storage clarified.

g. Instructions for reporting IAPA equipment or communications problems added.

h. All references to control zones changed to "Class B/C/D/E Surface Areas;" and references to transition areas changed to "Class E 700′ airspace."

i. Flight Inspection Office (FIO)/Air Traffic Control (ATC) actions regarding minimum vector altitude (MVA) / Minimum IFR Altitude (MIA) charts clarified.

j. Instructions regarding area navigation (RNAV) feeder routes incorporated.

k. Requirement for drawings with airspace packages deleted.

l. Rounding convention clarified.

m. Terminal distance measuring equipment (DME) fix designations clarified**.**

n. "LOC only" notation clarified.

o. Alternate minimums notation clarified.

p. Dual minimums notes clarified.

q. Inoperative component notes clarified.

r. Automatic weather observation system (AWOS) instructions modified**.**

s. Additional flight data block instructions for LORAN-C added.

t. FAA Form 8260-2 controlling obstruction documentation clarified.

u. FAA Form 8260-9 required obstruction clearance (ROC) and height of missed approach surface (HMAS) documentation clarified.

v. FAA Form 8260-16 changeover point (COP) instructions clarified; flight inspection date and cancellation instructions clarified.

w. Numerous flight procedure references added to appendix 1.

x. FAA 8260-series forms examples updated.

104. FORMS.

a. The following forms are provided in electronic form for use in the development and maintenance of flight procedures.

FAA FORM NUMBER	TITLE
FAA Form 8260-1	Flight Procedures Standards Waiver
FAA Form 8260-2	Radio Fix and Holding Data Record
FAA Form 8260-3	ILS-Standard Instrument Approach Procedure
FAA Form 8260-4	Radar-Standard Instrument Approach Procedure
FAA Form 8260-5	Standard Instrument Approach Procedure
FAA Form 8260-7	Special Instrument Approach Procedure
FAA Form 8260-9	Standard Instrument Approach Procedure Data Record
FAA Form 8260-10	Standard Instrument Approach Procedure (Continuation Sheet)
FAA Form 8260-11	U.S. Army/U.S. Air Force ILS Standard Instrument Approach Procedure
FAA Form 8260-12	U.S. Army/U.S. Air Force Radar Standard Instrument Approach Procedure
FAA Form 8260-13	U.S. Army/U.S. Air Force Standard Instrument Approach Procedure
FAA Form 8260-15A	Takeoff Minimums and Textual Departure Procedures (DP)
FAA Form 8260-15B	Graphic Departure Procedures (DP)
FAA Form 8260-15C	Departure (Data Record)
FAA Form 8260-16	Transmittal of Airways/Route Data
FAA Form 8260-20	U.S. Army/U.S. Air Force Standard Instrument Approach Procedure (Continuation Sheet)
FAA Form 8260-21	U.S. Army Departure Procedures/Takeoff Minimums
FAA Form 8260-23	U.S. Army/U.S. Air Force Standard Instrument Departure (SID)
FAA Form 8260-24	U.S. Army/U.S. Air Force Standard Terminal Arrival (STAR)

b. Computer Generated Forms. Most FAA forms used in the development of instrument procedures can be automated through the use of an approved electronic forms software package.

(1) Implementation. The implementation of this system will reduce the errors and tedium of filling procedures forms either by hand or the typewriter. This system also allows information to be extracted from sources such as text files and other databases.

(2) Use of Automated Forms. This automated process allows each user to fill in forms completely and accurately, and to print the forms. The Flight Procedure Standards Branch, AFS-420, provides administrative control over any modification of the automated forms. Direct any recommendations for changes or modifications to AFS-420 with a courtesy copy to the Automation Support, AVN-160C.

(3) Equipment Requirements. Each user office must have access to the appropriate hardware/software to use automated electronic forms software. Contact AVN-160C for more specific requirements.

(4) System Description. This electronic form processor has a visual interface and allows each user to work with forms using windows, pictures, and menus on a screen. The completed screen data and form may be printed on bond paper.

c. IAPA Generated Forms. Refer to chapter 2, section 13.

105. TERMS AND DEFINITIONS.

For the purpose of this order, flight procedures are identified as the functions for predetermining safe and practical methods of navigating aircraft that prescribe intended flight tracks, operational altitudes, and arrival/departure minimums. Flight procedures are subdivided into six general categories as follows: departure procedure, en route, instrument approach, missed approach, holding, and fix descriptions. The following words have the meaning shown:

a. AAO – Adverse Assumption Obstacle.

b. May – action is permissible.

c. Must/Shall – action is mandatory.

d. Should - action is desirable.

e. Will – Indicates a presumption that action is to be taken.

f. AWO/PM – All Weather Operations Program Manager.

g. 14 CFR – Title 14 of the Code of Federal Regulations.

h. FICO – Flight Inspection Central Operations, AVN-250.

i. Flight Inspection Operations Division, AVN-200.

j. FPO – Flight Procedures Office.

k. IAPA – Instrument Approach Procedures Automation.

l. IFP – Instrument Flight Procedure.

m. Miles – nautical miles (NM) unless otherwise specified.

n. NACO - National Aeronautical Charting Office, AVN-500.

o. NFDC – National Flight Data Center, ATA-110.

p NTAP – Notices to Airmen Publication.

q. NFPO – National Flight Procedures Office, AVN-100.

r. SIAP – Standard Instrument Approach Procedure.

s. USNOF – U.S. NOTAM Office.

106. INFORMATION UPDATE.

For your convenience, FAA Form 1320-19, Directive Feedback Information, is included at the end of this change to note any deficiencies found, clarification needed, or suggested improvements regarding the contents of this change. When forwarding your comments to the originating office for consideration, please provide a complete explanation of why the suggested change is necessary.

107-109. RESERVED

SECTION 2. RESPONSIBILITIES

110. FLIGHT STANDARDS SERVICE (AFS-1).

a. Flight Standards Service is responsible for the use of air navigation facilities, appliances, and systems by aircraft operating in established environments and the National Airspace System (NAS). Responsibility includes governing policy and oversight of manual and automated development and maintenance of terminal and en route flight procedures. The director has final authority to issue, amend, and terminate rules and regulations relating to instrument procedures, minimum en route altitudes, flight procedures, operational weather minimums, and minimum equipment requirements.

b. Responsibility for the overall management of the Flight Procedures and Airspace Program is vested in the Flight Technologies and Procedures Division (AFS-400). This order is primarily concerned with those offices having direct responsibility for the accomplishment of the Flight Procedures and Airspace Program. The following is a brief description of their activities.

111. FLIGHT TECHNOLOGIES AND PROCEDURES DIVISION (AFS-400).

a. This division is the principal element of the Flight Standards Service governing policies, criteria, and standards for establishing and maintaining terminal and en route flight procedures; for using air navigation facilities, appliances, and systems; and for certification of IAPA software. This office is designated as the final authority to issue, amend, and appeal minimum en route IFR altitudes and associated flight data under 14 CFR Part 95 and standard instrument approach procedures under 14 CFR Part 97. The division is also responsible for approval/disapproval of special instrument approach procedures and requests for waivers of standards.

b. The Flight Operations Branch, AFS-410, is the principal element of the division with respect to concepts, policies, systems, and programs associated with the operational and flight technical aspects of all weather operations. It develops concepts for design, evaluation, and approval of Category I, II, and III approach and landing operations, as well as lower than standard takeoff minimums.

c. The Flight Procedure Standards Branch, **AFS-420,** is the principal element within the division, with respect to the rulemaking process of the Flight Procedures Program; also with respect to the development, application, and oversight of national policies and directives for the administration of the national flight procedures program, and development of criteria pertinent to the design of instrument flight procedures; and with respect to testing, data analysis, verification, and validation of navigation systems and concepts. This branch serves as the focal point within Flight Standards for all matters relating to airspace and cartographic programs, and is the primary interface for industry on matters relating to instrument procedures criteria. It participates as the division focal point in the waiver review process, soliciting comments from appropriate FAA offices, providing operational input, and recommending the division final waiver approval/disapproval. The branch provides technical advice and assistance to other FAA elements, government agencies, and industry on the interpretation and application of criteria. It analyzes and evaluates execution of flight procedure programs within the FAA to determine compliance with national policy. It also provides for the technical evaluation and risk assessment of proposed instrument operations not covered by standard criteria.

112. REGIONAL FLIGHT STANDARDS DIVISIONS (AXX-200)

a. The Regional Flight Standards Divisions (FSD) manage and direct the geographic regions' air carrier, general aviation, and all weather operations programs. Each FSD provides the regional implementation of national concepts, policies, standards, systems, procedures, and programs with respect to the operational and flight technical aspects of the all weather operations program.

b. The all weather operations program responsibilities include but are not limited to the following:

(1) Establishing regional requirements for, and managing distribution of, special instrument approach procedures. Receiving and resolving user/industry comments on new and revised special instrument approach procedures.

(2) Providing technical evaluations in support of regional airspace programs to determine the effect on visual flight operations.

(3) Coordinating the FSD portion of assigned foreign instrument approach procedures programs.

(**4) Coordinating the FSD involvement** in Category II and III approvals including approval of the associated Surface Movement Guidance System plan.

(5) Providing the operational input on matters related to regional capacity studies and airport operational safety initiatives.

(6) Performing airport/airspace evaluations to address operational safety issues in coordination with Airports Division, as necessary.

(7) Providing the consolidated FSD position for review of charted visual flight procedures.

(8) Coordinating with Airports Division in the approval or denial of modifications to airport standards.

(9) Providing operational review and comments for Airway Facilities Division's submission of a NAS Change Proposal (NCP).

(10) When requested by the FPO, assists in developing the equivalent level of safety for an AVN originated procedures waiver.

113. AVIATION SYSTEM STANDARDS (AVN).

a. AVN is the principal element within Airway Facilities Service (AAF) directly responsible for the in-flight inspection of air navigation facilities and for the development and maintenance of instrument flight procedures throughout the United States and its territories. It is responsible for input to the regional Airway Facilities Division Facilities and Equipment (F&E) budget submission with respect to terminal air navigation aids (other than radar) and visual approach aids. Additionally, AVN supports the Air Traffic Services (ATS) obstruction evaluation and airport airspace analysis (OE/AAA) program.

b. The National Flight Procedures Office, AVN-100, is the AVN element responsible for the development, maintenance, quality assurance, and technical approval of public-use instrument procedures. It is also responsible for quality assurance and operations support, as requested, for NAS related products. Upon completion of instrument procedures development, the division forwards completed documentation to the FICO for flight inspection and operational approval. Establishes procedures to ensure operational data is included in the national database. Responsibilities include but are not limited to:

(1) Forwarding industry and user comments on instrument procedures to AVN-160 for evaluation and processing.

(2) Coordinating requests for new instrument procedures service with the respective regional division and other concerned offices, and conducting instrument procedures feasibility studies.

(3) Coordinating submission by responsible offices of all pertinent data and supporting documents required for procedures development and assignment of priority when further procedures action is required.

(4) Planning and coordinating new or relocated NAS facilities.

(5) Coordinating with regional divisions to select a charting date consistent with priorities and workload when a component of the National Airspace System (NAS) is to be commissioned, decommissioned, or altered.

(6) Coordinating the input for the planning and development of regional F&E budget submissions and programming actions.

(7) Analyzing obstruction evaluations to determine the effects on current and planned instrument flight operations, minimums, and/or flight altitudes of all civil, joint-use, and U.S. Army instrument procedures in accordance with current policy.

(8) Evaluating regional airport and airspace matters.

(9) Determining the necessity for environmental impact studies as required by current policy.

(10) Acting as focal point for flight inspection problems within the region.

c. The Flight Inspection Operations Division, AVN-200, is the AVN element responsible for flight inspection of navigation aids and flight procedures in support of the NAS. The division initiates and completes investigative remedial action with respect to any deficiency or reported hazard, including restrictions or emergency revisions to procedures. It maintains liaison with AVN-100, as well as other FAA offices, civil and military interests, to ensure consideration of all requirements relating to the procedural use of navigation facilities. It maintains a suitable record system reflecting the status of each flight procedure with required supporting data.

d. The National Aeronautical Charting Office (NACO), AVN-500, is the AVN element responsible for the production and distribution of aeronautical charts and related publications and products. This includes the construction and maintenance of Standard Instrument Approach Procedures (SIAPs), Departure Procedures (DPs), Standard Terminal Arrival Routes (STARs) charts, Airport Diagrams and Special Graphics. NACO is responsible but not limited to:

(1) Selecting and evaluating source data for final chart compilation.

(2) Validating geographical positions, distances, and bearings.

(3) Maintaining liaison with elements of FAA to support safe and accurate portrayal of charting data.

(4) Evaluating obstacle source data to certify accuracy codes as built.

(5) Providing civilian charts in support of military requirements.

(6) Providing international charting support to selected foreign countries.

114. AERONAUTICAL INFORMATION SERVICES (ATA-100).

a. This is the principal element within Air Traffic Service (AAT) directly responsible for managing the agency's program to provide aeronautical information services to ensure the flow of information necessary for safety, regularity, and efficiency of air navigation. This division is charged with the responsibility for collecting, collating, validating and disseminating aeronautical data regarding the United States and its territories. It is also a source for technical assistance to AVN regarding data base accuracy standards, content, and format. This division also serves as the primary interface between the FAA and the National Oceanic and Atmospheric Administration for government aeronautical charting services.

b. The National Flight Data Center, ATA-110, is the principal element within ATA-100 with respect to maintaining the national aeronautical information database and for disseminating information relating to the NAS. NFDC responsibilities include but are not limited to:

(1) Publishing the daily National Flight Data Digest (NFDD) to promulgate additions, changes, and deletions to elements of the NAS.

(2) Conducting pre-publication review of aeronautical data contained in standard instrument approach and departure procedures, standard terminal arrival routes, standard instrument departures, military training routes, navigational aids, airport data, and airspace actions submitted for action, and to identify and correct items in non-conformance with applicable directives.

(3) Validating submitted data with the National Database and resolving contradictions.

(4) Reviewing, processing for transmittal, and tracking NOTAMs regarding amendments, cancellations, and corrections to instrument procedures in the NAS and canceling these NOTAMs when government charts are updated.

(5) Compiling NOTAMs for publication in the Notices to Airmen Publication (NTAP).

(6) Managing the development and assignment of five-letter fix names and NAVAID/airport identifiers.

(7) Promulgating SIAPs with assigned effective dates in a bi-weekly transmittal letter and completing necessary requirements for publication in Part 97.

(8) Issuing, on a predetermined schedule, amendments to Part 95.

(9) Maintaining copies of 8260 and 7100 series forms that support public use SIAPs, fixes, airways, STARs and DPs (SIDs).

115. INDIVIDUAL.

Personnel working within the Flight Procedures Program are responsible for maintaining professional knowledge in a technical, complex, and specialized field, and for the application of the knowledge to assure safety and practicality in air navigation. Where directives are deficient, each individual must take the initiative to seek an acceptable method of resolution and to inform the responsible office of any recommended change to policy, procedures, etc., that is cost beneficial and/or provides increased operational safety.

116-119. RESERVED.

SECTION 3. INSTRUMENT APPROACH PROCEDURES AUTOMATION (IAPA) RESPONSIBILITIES

120. BACKGROUND.

a. The FAA has developed IAPA to automate the mechanics of the Instrument Flight Procedures Program to include the development, review, storage, and electronic transmittal of instrument flight procedures with ancillary system benefits.

b. The IAPA system standardizes the application of criteria specified in Order 8260.3, United States Standard for Terminal Instrument Procedures (TERPS); Order 8260.19, Flight Procedures and Airspace; and other appropriate directives, advisory circulars, and Federal Aviation Regulations. IAPA applies established FAA software standards. IAPA software provides for application of standardized data and data accuracy standards in the development of instrument flight procedures.

c. IAPA includes obstacles, terrain, NAVAID, fix, holding, airport, and runway data that are available to system users. IAPA is included in the FAA's Capital Investment Plan (CIP). Procedures for controlling changes to this system will be in accordance with Order 1370.52, Information Resources Policy.

121. AVIATION SYSTEM STANDARDS RESPONSIBILITY.

The Aviation System Standards, AVN-1, is the office of primary interest and is responsible for overall functional management of the IAPA system and has been delegated responsibility for certification of IAPA software (see paragraph 121b(7)).

a. The National Flight Procedures Office, AVN-100, is responsible for establishing policy guidance in the administrative control of IAPA, as well as coordinating actions required to meet changing legal and user requirements. In addition, this division is responsible for:

(1) Carrying out the development of IAPA by coordinating the efforts of users, developers, operators, and contractors associated with IAPA.

(2) Managing and reporting on project schedules, costs, and other supporting resources for the Airway Facilities Service (AAF) Information Resource Manager.

(3) Establishing and maintaining a positive change control management system through the developmental and implementation phases to assure that the completed project (the operational IAPA system) meets the requirements of the system definition.

(4) Determining that all proposed changes are essential to the development task and are coordinated among all prospective users of the system.

(5) Keeping contracting officers advised, if appropriate, on proposed changes in order that the officer may be alerted to the impact that they may have on current or proposed contractual actions.

(6) Preparing for and participating in operational tests and evaluations of the information system.

(7) AVN-100 is responsible for final certification of instrument flight procedures to include that:

(a) Data used to develop the instrument approach procedure was correct.

(b) The instrument approach procedure was developed in accordance with Order 8260.3; Order 8260.19, and other appropriate directives, advisory circulars, and Federal Aviation Regulations listed in appendix 1.

(c) The appropriate Flight Procedures Standards Waiver, if required, is on file.

b. The Quality and Operations Assurance Branch, AVN-160, is responsible for assuring the successful ongoing operation of the data system. In the performance of these responsibilities, the Quality and Operations Assurance Branch must:

(1) Establish and maintain a positive change control management system to assure that all changes to the operational IAPA system are cost effective and are coordinated among all parties who use IAPA.

(2) Develop necessary guidelines for the control and dissemination of data from IAPA and other assigned systems.

(3) Authorize release of data in special cases where guidelines are not available.

(4) Provide for coordination in data systems where several program elements share primary operational interest.

(5) Establish priorities for task assignments, scheduling, and utilization of personnel and physical resources.

(6) Assure system configuration, documentation, and reliability.

(7) Conduct extensive operational testing and debugging, to assure system software is in conformance with Order 8260.3 and other appropriate directives, advisory circulars, and 14 CFR provisions. Conduct final system certification of software before release to users through coordination with AFS-420.

(8) Review national user requirements and approve system modifications.

(9) Ensure that the provisions of Order 1370.82, Information Systems Security Program, are complied with in the security control of computer programs and associated documentation.

c. The Flight Inspection Technical Support Branch, AVN-210*,* is responsible for establishing and maintaining the Aviation Standards Information System (ASIS) in support of IAPA requirements.

122. OFFICE OF INFORMATION SERVICES (AMI-1).

The Office of Information Services, AMI-1, is responsible for the software development from its inception through implementation. This office is also responsible for maintenance of system software, and must provide and control automatic data processing (ADP) resources that include:

a. The utilization of personnel (including contract personnel) and physical resources.

b. Providing technical consultation and advice as required.

c. Providing telecommunications support, and other necessary ADP enhancement and support services for IAPA.

d. Participating in the review of site preparation, installation, and testing support as required.

e. Providing on-site hardware and software installation and testing support as required.

f. Providing preliminary testing of software to assure conformance with the United States Standard for Terminal Instrument Procedures and other appropriate directives, advisory circulars, and Federal Aviation Regulations as advised by the program office.

123. OFFICE OF ASSISTANT ADMINISTRATOR FOR INFORMATION SERVICES (AIO-1).

The Office of Assistant Administrator for Information Services, AIO-1, will develop governing policies and responsibilities for automatic data processing (ADP) program management in accordance with Order 1370.52, Information Resources Policy.

124. DIRECTOR, AIRWAY FACILITIES SERVICE (AAF-1).

The Director, Airway Facilities Service, AAF-1, is responsible for the determination of agency-wide priorities for use and control of telecommunications resources needed to support IAPA. This responsibility is administered through the Telecommunications Integrated Product Team in the NAS Operations Program (AOP) of Airway Facilities.

125-199. RESERVED.

most recent Epoch Year's MV, and the projected MV for the next Epoch Year. For the purpose of planning and implementation, maintain a current listing of those candidate navigational aids and airports with a difference of 2° or more between the MV of record and the nearest future Epoch Year value.

(6) Notify NFDC of changes to assigned MV and the effective date of those changes for publication in the NFDD; notify other concerned offices having related responsibilities to ensure timely implementation of necessary actions. The effective date selected must allow sufficient time for procedures processing in accordance with established schedules. MV changes which affect only terminal instrument procedures may have an effective date concurrent with publication of a specific procedural amendment.

(7) Amend instrument flight procedures as required, predicated on navigational aids or airports undergoing a change of MV of record. Conduct a thorough survey to determine the full impact the MV change will have on any instrument procedure. Such surveys must include high and low altitude airways/jet routes, direct routes, air carrier off-airway routes, fixes in both high and low altitude structures, terminal routes and fixes, ODPs, SIDs, STARs, and any other application to instrument flight procedures. Use the MV of record (or as officially changed) to develop instrument flight procedures - regardless of the MV shown on the chart being used.

(8) VOR, VOR/DME, and VORTAC facilities supporting the en route structure (which may or may not have instrument procedures predicated on them):

(a) Modify all fixes and IAPs. Modify all 14 CFR Part 95 Direct and Off-Airway (Non-Part 95) routes with documented radial(s) or bearing(s). Change ESVs. Make all modifications to meet an effective date that coincides with the en route change cycle.

NOTE: A listing of affected fixes, holding patterns, DPs, SIDs, STARs, military training routes, preferred routes, and ATS routes may be obtained from NFDC (ATA-110).

(b) Coordinate changes with ATC (ARTCC and approach control) in an attempt to eliminate routes, fixes, and instrument procedures that are no longer required.

(9) Navigational aids NOT supporting en route structure:

(a) Initiate implementation of the nearest future Epoch Year MV whenever any instrument procedure is established or amended. The nearest future Epoch Year MV will become effective concurrent with publication of the amendment (see paragraphs 816n and 816o).

(b) Amend and process multiple instrument procedures to simultaneously become effective concurrent with the instrument procedure specified in the MV change notification to NFDC.

(c) Submit revisions of all affected fixes with the instrument procedure(s). Change ESVs.

(d) Amend radar and DF procedures when airport MV of record is changed. If the DF is located at an off-airport site, obtain the MV for the antenna site; include MV and Epoch Year in the lower right corner of the Form 8260-10. See chapter 4, section 5.

(10) Military Facilities.

(a) Accomplish MV changes for U.S. Army facilities in the same manner as for civil facilities; however, obtain the installation commander's prior approval.

(b) Notify the appropriate military representatives, in writing, when the need to change the MV of other military facilities is identified.

(11) Airports.

(a) Amend IAPs, SIDs, and ODPs which specify runway designator numbers affected by MV change.

(b) Notify the regional 530 office of the need for amendment action if STARs contain runway designator numbers affected by MV change.

(c) Take appropriate NOTAM action if repainting of an affected runway is not accomplished on the required date.

c. NFDC. Upon notification by AVN of any change to MV of record, publish a notice of change in the NFDD to indicate the effective date of such change.

d. Regional Airway Facilities Division. Coordinate with AVN to obtain the MV of record for assignment to newly installed or relocated navigational aids.

e. Regional Airports Division. Coordinate with AVN-160 prior to establishing or revising runway designator numbers for an airport having one or more instrument approach or departure procedures, to determine the MV to be applied to the runway true bearing. Determination of the runway designator number should be a matter of joint agreement with AVN, and be accomplished sufficiently in advance to allow for procedural amendments.

f. Military organizations. Contact AVN-160 to obtain the MV of record to be applied to navigational aids or airports under military jurisdiction. Once obtained, it is the responsibility of the military to provide ATA-110 MV updates.

217. GUIDELINES. The identification and selection of navigational aids or airports as candidates for revision of MV of record require careful consideration and evaluation of a number of factors - as the impact of MV changes can be considerable. Air Traffic Division may have to initiate or revise published air traffic procedures; Airway Facilities is directly involved in facility rotations and requires proper coordination. The Airports Division, or appropriate military authority, may have to arrange for repainting of runway designator numbers (see paragraph 858e(2)(e)).

NOTE: Guidelines pertaining to runway designation marking relative to magnetic changes can be found in AC 150/5340-1, Standards for Airport Markings, paragraph 7d.

a. MV versus Epoch Year Value. When the difference between the MV of Record and the nearest future Epoch Year value of any navigational aid or airport is 3° or more, the MV of record must be changed to the nearest future Epoch Year value. When the difference is less than 3°, AVN must consider implementing the nearest future Epoch Year value when workload permits. Factors to consider include whether the navigational aid is isolated or in close proximity to one or more other facilities, whether on airport or away from an airport, and the impact on instrument flight procedures.

b. Facilities on airports. At airports with localizer(s) or more than one navigational aid, the MV at the airport reference point (ARP) must be designated and assigned to all facilities at that airport, including all components of the ILS.

c. MV versus OC Chart Value. Where the assigned MV of record differs from the MV shown on the Obstruction Chart (OC), the assigned MV of record must be used in the development of instrument flight procedures.

d. Runway bearing must be assigned the same MV as the airport.

e. At major airport terminal areas, the ARP MV of record at the designated controlling airport may be used in determining the MV applied to all navigational aids serving the terminal areas.

218-219. RESERVED.

SECTION 6. NOTICES TO AIRMEN (NOTAM)

220. GENERAL.

NOTAMs provide timely knowledge to airmen, and other aviation interests, of information or conditions that are essential to safety of flight. NOTAMs pertaining to instrument procedures remain in effect until the pertinent charts and publications are amended or the condition requiring the NOTAM ends. This section deals primarily with policy for issuing Flight Data Center (FDC) NOTAMs when required to maintain the accuracy and currency of charted terminal and en route flight procedures. Also see Order 8260.3, United States Standard for Terminal Instrument Procedures (TERPS), paragraph 150e.

221. NATIONAL NOTICE TO AIRMEN SYSTEM.

A National Notice to Airmen System has been established to provide airmen with the current status of the National Airspace System (NAS). This system is under the purview of Air Traffic Service (AAT) and management/operational guidance is contained in Order 7930.2, Notices to Airmen (NOTAMs). The following is a brief summary of the issues that are applicable to instrument procedure changes and government chart corrections.

a. FDC NOTAMs are issued through the U.S. NOTAM Office (USNOF) and primarily used to disseminate safety of flight information relating to regulatory material (see Order 7930.2, Chapter 7 for specific FDC NOTAM categories). FDC NOTAMs are numbered by the U.S. NOTAM System (USNS) to reflect the year of issuance and the sequence number for the calendar year, (e.g., 2/0445). FDC NOTAMs are transmitted on all Service B circuits, and stored in the Consolidated NOTAM System, after which they are entered in the Notices to Airmen Publication (NTAP) until canceled. The NTAP is distributed via U. S. mail.

b. NOTAM Ds are issued under the Flight Service Stations' Accountability System and receive the same dissemination as the surface weather report for the originating station. NOTAM Ds provide the user with current information on an hourly basis and are numbered to reflect the month of issuance and the sequence number of the month, (e.g. 6/18).

222. FDC NOTAM TYPES.

FDC NOTAMs may be either permanent (P-NOTAMs) or temporary (T-NOTAMs), as specified below, when used to promulgate changes to published instrument flight procedures, and corrections to U.S. Government charts. FDC NOTAMs must be prefixed with an action code as follows:

a. FI/P (Flight Information/Permanent). This prefix (FI/P) is used only to promulgate U.S. Government charting correction information. Cartographic agencies may initiate immediate changes to charted information based upon the P-NOTAM information. P-NOTAMs may NOT be used for changes to SIAPs, airways, DPs, or STARs. Refer to paragraphs 224b and c for DP and STAR NOTAM procedures.

b. FI/T (Flight Information/Temporary). Use this prefix when safety of flight issues requires changes to SIAPs, airways, or textual DPs. If the condition requiring the NOTAM will be effective for more than four charting cycles (224 days), an abbreviated or full amendment 8260-series form must be submitted to amend the procedure. The abbreviated form must be submitted as soon as possible to allow publication of the procedural change within the 224-day timeframe (see paragraph 813).

223. FDC NOTAM PREPARATION, REVIEW, AND TRANSMITTAL.

a. AVN-100 is the primary office responsible for formulating procedural and airway FDC NOTAMs and forwarding them for transmittal. Specific internal guidance for NOTAM preparation, quality control, transmittal, cancellation, and follow-up actions will be developed jointly by AVN-160, ATA-110, and ATT-134 (USNOF). AFS-420 will be provided the opportunity to review and comment on the procedures prior to implementation. The following items must be included in the guidance:

(1) Procedures to ensure that all FDC NOTAMs are coordinated with the affected ARTCC facility and the appropriate regional offices at the time of submission, or if unable, during the next normal workday (see Order 8260.3, Volume 1,

paragraph 150). AVN-100 must also notify the airport manager at the affected location whenever possible.

NOTE: ARTCCs are responsible for forwarding FDC NOTAM information to the affected terminal facilities under Order 7930.2H, paragraph 2-2-3.

(2) Procedures to ensure that ALL FDC NOTAMs are reviewed for accuracy, completeness, content, etc. prior to submission

(3) Procedures to ensure that NFDC and the submitting agency are kept appraised of all changes in instrument procedure FDC NOTAM numbering.

(4) Procedures to ensure that all FPO or AVN-200 initiated FDC T-NOTAMs and NOTAM Ds are coordinated through AVN-100.

b. NFDC will review applicable FDC NOTAMs for accuracy, format, completeness, and database agreement. Discrepancies noted by NFDC will be resolved through the originating AVN-100 branch. NFDC is responsible for compiling NOTAMs for inclusion in the Notices to Airmen Publication (NTAP).

c. The USNOF is also responsible for ensuring that FDC NOTAMs are in the proper format under this directive and Order 7930.2. Questions/discrepancies will be addressed to the submitting agency or AVN-160 as appropriate. The USNOF must ensure that NFDC and AVN-100 are appraised of all changes in instrument procedure related FDC NOTAM numbers; e.g., when a NOTAM is cancelled and reissued due to typographical error, etc. FDC NOTAMs affecting FAA developed military SIAPs at civil locations must be issued separately and forwarded to the USNOF military representative.

d. Cartographic Standards Branch, ATA-130, is responsible for issuing, tracking, and canceling FDC NOTAMs used to correct/amend U.S. Government IFR en route and VFR sectional aeronautical charts when necessary to resolve charting errors. When a printing error is noted in the Terminal Procedures Publication (TPP), AVN-100, AVN-500, and ATA-110 will jointly coordinate with ATA-130 to determine if the error can be safely addressed by NOTAM or if the procedure must be suspended pending issuance of a replacement chart.

224. INSTRUMENT PROCEDURE NOTAMs.

a. A complete review and a new amendment are the preferred methodology for permanent procedure changes, particularly when applying new or revised TERPS criteria. However, it is recognized that this may not always be possible due to workload, staffing level, etc. An FDC T-NOTAM followed by an abbreviated 8260-series form within the allotted 224-day is an equally effective means of updating SIAP charts and textual DPs within the following guidelines:

(1) Whenever the need for a NOTAM to a procedure arises, AVN-100 must review the procedure and ascertain that there are no other safety of flight changes required. Do NOT prepare a NOTAM solely to address minor non-safety related discrepancies to a SIAP.

(2) Procedural minimums must not be lowered by NOTAM except as allowed by Order 8260.3, Volume 1, paragraph 150e.

(3) Exercise caution in initiating or adding a NOTAM to a procedure when there is already a current NOTAM in effect for the procedure. In many cases close follow-up action, including canceling and reissuing NOTAMs, will be necessary to ensure there is no confusion for pilots and chart producers. All FDC NOTAMs must be issued against the currently published procedure.

Examples:

The currently published SIAP is AMDT 3 and AMDT 3A has been forwarded but not yet published. Another T-NOTAM is required prior to AMDT 3A. Issue a T-NOTAM against AMDT 3. When AMDT 3A is published, the T-NOTAM must be canceled and reissued for AMDT 3A.

(4) When changes to civil procedures also affect FAA-developed military procedures at civil or joint-use airfields, AVN-100 must issue a separate FDC NOTAM for the military procedure as specified in Orders 8260.15, United States Army Terminal Instrument Procedures Service, and 8260.32, United States Air Force Terminal Instrument Procedures Service. AVN-100 must request the USNOF to forward the civil NOTAM and the reason to the cognizant military authority for appropriate military NOTAM action.

(5) NOTAM requirements for FAA developed U.S. Army procedures at military airfields must be processed under Order 8260.15. NOTAM requirements for FAA developed U.S.A.F procedures at civil airfields must be processed under Order 8260.32.

b. Changes to graphic ODPs and SIDs must be promulgated as NOTAM Ds under Order 7930.2. These NOTAMs are developed by AVN-100 and are issued by the USNOF using the accountability code "USD." The following format examples are provided:

USD 12/001 SAN BORDER THREE DEPARTURE JULIAN TRANSITION: FROM OVER BROWS INT VIA JLI R-182 TO JLI VORTAC

USD XX/XXX LAX CHATY TWO DEPARTURE, GORMAN TRANSITION: MINIMUM ALTITUDE BROWS, INT TO GMN VORTAC, 8,000 FT

In the first example above, "USD" is the NOTAM accountability code; "12/001" is the NOTAM number which is assigned by the USNOF (first NOTAM (D) issued in December); "SAN" indicates the three-letter airport identifier; the remainder is the NOTAM text.

(1) Specific internal guidance for NOTAM D preparation, quality control, transmittal and cancellation will be developed jointly between AVN-160 and ATT-134 (USNOF). AFS-420 will be provided the opportunity to review and comment on the procedures prior to implementation. The following items must be included in the guidance:

(a) Procedures to ensure that ALL NOTAM Ds are reviewed for accuracy, completeness, content, etc. prior to submission.

(b) For multiple airport DPs, a separate NOTAM D must be prepared for each airport affected by the DP.

(c) Temporary and permanent conditions may be promulgated via the NOTAM D process; however, NOTAM Ds must not be used as a source to effect charting changes. Permanent procedural changes to graphic DPs must be made via a new or amended 8260-15 series form within 224 days of the issuance of the associated NOTAM D.

(d) The USNOF must review each NOTAM to ensure formatting, contractions, etc. are correct and assign the NOTAM number. Questionable items must be resolved with the originator prior to issuance.

(e) Once issued, AVN-100 must be responsible for obtaining the NOTAM D number from the USNOF, tracking, and canceling the NOTAM when the condition requiring the NOTAM is no longer applicable.

c. Changes to STARs requiring NOTAM action are also promulgated as NOTAM Ds. The appropriate ARTCC retains the responsibility for initiating, tracking, and canceling STAR NOTAMs.

d. General NOTAM D Actions.

(1) When a NOTAM D is issued closing an airport permanently, an FDC NOTAM need not be issued denying use of a SIAP. A routine procedure cancellation should be processed.

(2) When a NOTAM D is issued to shut down a facility permanently, only routine cancellation of procedures predicated on that facility are required. FDC NOTAMs may be required for other procedures supported by the affected facility.

(3) When a NOTAM D is issued closing a runway, an FDC NOTAM need not be issued denying straight-in minimums to that runway. If the closing is permanent, routine procedure cancellations, including takeoff/departure procedures, must be processed immediately.

(4) When a NOTAM D is issued for a facility shutdown or outage, an FDC NOTAM denying SIAP use is not required for those SIAPs using only that facility. However, other SIAPs in the vicinity must be reviewed to determine if that facility supports courses or fixes; in such cases, those SIAPs require an FDC NOTAM. Particular attention must be given to fixes supporting stepdown minimums and missed approach procedures, which are predicated on the out-of-service facility. It is not necessary to issue NOTAMs for fixes and terminal route segments which are related to unusable airway segments from the subject facility. Do not issue "Radar Required" NOTAMs on unusable or restricted airway segments (see also paragraph 463).

(5) When an instrument approach procedure is 'NOTAMed' for an outage of an NDB or DME facility providing ancillary support, (not providing final approach course guidance), exempt aircraft equipped with IFR GPS systems from

the restriction. For clarification, state the reason for the restriction in the text of the NOTAM. An example for use when a DME antenna is out of service: "DME MINIMUMS NA EXCEPT FOR IFR GPS-EQUIPPED AIRCRAFT, ORD DME OTS." An example of an ILS approach that uses an LOM for procedure entry and/or missed approach clearance limit: "PROCEDURE NA EXCEPT FOR IFR GPS-EQUIPPED AIRCRAFT, GR LOM OTS."

(**6) When a NOTAM D removes a localizer from service,** the SIAP is unusable. If the GS is out, the precision approach is unusable. If other ILS components are out, the inoperative table applies.

(7) When radio control of approach lights or runway lights are commissioned or the frequency is changed, Flight Inspection issues a NOTAM D in accordance with Order 8200.1, United States Standard Flight Inspection Manual.

225. AIRWAY NOTAMs.

When a restriction or a change to an airway requires a NOTAM, AVN-100 must prepare and forward an FDC T-NOTAM following the procedures in paragraph 223.

a. NOTAMs, reflecting airway changes within one or more ARTCCs airspace, are issued under the affected ARTCC identifier as Center Area NOTAM (CAN) FDC NOTAMs on the NOTAM circuit. The formats specified in Order 7930.2, chapter 7, section 1 must be followed regarding the number of ARTCCs and states affected.

b. Airway changes involving a single state and one or more ARTCCs must be issued with the ARTCC identifier followed by the two-letter state code. The two-letter state code must also follow all NAVAID and fix designators.

Examples:

"FDC 2/0001 ZFW OK FI/T AIRWAY ZFW ZKC. V140 SAYRE (SYO) VORTAC, OK TO TULSA (TUL) VORTAC, OK MEA 4,300.

FDC 2/0002 ZKC OK FI/T AIRWAY ZFW ZKC. V140 SAYRE (SYO) VORTAC, OK TO TULSA (TUL) VORTAC, OK MEA 4,300.

REASON: TEMPORARY NEW TOWER. OE 98-ASW-0123."

c. If the airway NOTAM affects one but less than four ARTCCs and multiple states**,** issue one NOTAM for each affected ARTCC. If the NOTAM affects four or more ARTCCs, send one NOTAM using FDC as the facility identifier.

d. If the restriction will exceed the time limit established in paragraph 222b, forward an updated Form 8260-16 and/or 8260-2 simultaneously to NFDC and AVN-500 for charting.

226. NOTAM CONTENT.

a. FDC SIAP NOTAMs must identify the procedure being amended and the current amendment number. The NOTAM must be as concise as possible, and must NOT contain information that could be published at a later date by a routine amendment. For example, changes to the touchdown zone or airport elevation, which do not affect visibility minimums, do not require NOTAM action.

b. The text must be prepared by AVN-100 using plain language and those contractions found in the NTAP. Specialists must keep in mind that the NOTAM is directed to the pilot, and should be worded so that the intended change will not be misinterpreted. Avoid the use of internal cartographic instructions which have no meaning to pilots. Spell out NAVAID names in clear text followed by the identifier. If it appears that the NOTAM length will exceed 20 lines, refer to Order 7930.2, paragraph 4-3-4.

c. For temporary obstructions, include the type, elevation, distance, and direction from the airport or runway threshold, as appropriate, as the last line of the text.

d. Include a reason for the NOTAM following the NOTAM text. This information will not be transmitted as a part of the NOTAM text, but will inform the NFDC and the USNOF of the basis for the NOTAM. It will also ensure the data is retained in the NOTAM historical files.

Examples:

FDC 2/_____ ORD FI/T CHICAGO O'HARE INTL, CHICAGO, IL.
VOR RWY 22R AMDT 8B...
MDA 1400/HAT 750, VIS 1-1/2 ALL CATS. TEMPORARY CRANE 1100 MSL 1.2 NM SE OF RWY 23. (Specify distances less than 1 NM in feet.)

REASON: TEMPORARY CRANE FOR 90 DAYS. OE 02-AGL-1689

FDC 2/_____GPT FI/T GULFPORT-BILOXI INTL, GULFPORT, MS.
VOR RWY 31 AMDT 18...
S-31 MDA 720/HAT 693 ALL CATS. VIS CAT C 2, CAT D 2-1/2. CIRCLING MDA 720/HAA 692 ALL CATS. VIS CAT C 2, CAT D 2-1/2.

RADAR 1 AMDT 3…
VOR/DME OR TACAN RWY 31 ORIG...
S-31 MDA 660/HAT 633 ALL CATS. VIS CAT C 1-3/4, CAT D 2, CAT E 2-1/4. CIRCLING CATS A/B MDA 660/HAA 632.

TEMPORARY CRANE 410 MSL 1.5 NM SE OF RWY 31.

REASON: TEMPORARY CRANE FOR 160 DAYS. OE 02-ACE-1453.

FDC 2/_____ LAN FI/T CAPITAL CITY, LANSING, MI.
ILS RWY 10R AMDT 8A...
ILS RWY 28L AMDT 24...
VOR RWY 6 AMDT 23B...
VOR RWY 24 AMDT 7E...
RADAR-1 AMDT 13...
CIRCLING MDA 1420/HAA 559 ALL CATS.
REASON: NEW BUILDING, 1115 MSL. OE 02- AGL-2974.

NOTE: Since the above condition is permanent, SIAP Amendments must be processed within 224 days.

"FDC 2/_____ AXH FI/T HOUSTON-SOUTHWEST, HOUSTON, TX.
NDB RWY 28 AMDT 4...
LOC/DME RWY 10 AMDT 2A...CHANGE ALL REFERENCE TO RWY 10-28 TO RWY 9-27.

REASON: RUNWAYS RENUMBERED FOR MAGNETIC VARIATION CHANGE.

227. NOTAM FOLLOW-UP ACTION.

AVN-100 must review amended SIAP charts, ensure the procedural change has been charted correctly, and cancel the NOTAM on the amended procedure effective date.

228-229. RESERVED.

SECTION 7. QUALITY/STANDARDIZATION OF INSTRUMENT FLIGHT PROCEDURES

230. AVN-100 ACTION.

a. AVN-100 is responsible for the accuracy of procedures it develops, and for establishing and conducting a system of quality control which ensures that such procedures conform to applicable criteria, standards, and policy.

b. AVN-100's system of quality control must ensure that all flight procedures and NOTAMs submitted to NFDC for publication are of a professional quality that will not require corrections or changes following release.

c. When unusual circumstances exist, for which policy is not clear or is nonexistent, request a policy determination from AFS-420 PRIOR TO submission for publication. AFS-420 will issue appropriate instructions as necessary.

d. Instrument charts produced by the National Aeronautical Charting Office (NACO) will be reviewed by AVN-100, upon receipt, for variations from information submitted for publication and for clarity of the graphic portrayal. Charting errors detected must be forwarded directly to NFDC and AVN-500 for corrective action. Charts that do not clearly portray the procedures should be referred to AFS-420 and AVN-500, with recommendations for charting improvements.

231. AFS-420 ACTION.

a. AFS-420 monitors procedures and FI/T or FI/P NOTAMs on a random surveillance basis and only relative to policy compliance.

b. Preliminary reviews may be conducted by AFS-420 upon request by AVN-100. When unusual circumstances exist, AFS-420 will issue appropriate instructions to AVN-100 as necessary.

232-239. RESERVED.

SECTION 8. PERIODIC REVIEW OF INSTRUMENT FLIGHT PROCEDURES

240. GENERAL.

a. This section prescribes the minimum frequency of review of instrument procedures. When deemed necessary, and in the interest of safety or for other proper justification, make more frequent reviews. Review **all** instrument procedures to **ensure** that requirements for obstacle clearance, navigational guidance, safety, and practicality are met. **Immediately** comply with changes to criteria that relate to safety of flight. Use the review to ensure compliance with all other changes to criteria. FPOs can normally present current reviews of OEs, F&E, and AIP projects pertinent to the review process.

b. A review is considered complete if it occurs in the period from one month prior to one month after the month in which the review is due; e.g., if the review is due in July, the window is June 1 to August 31. If the window is met, the procedure review due month remains unchanged. However, if the review occurs outside of the specified window, the next review is due in the month in which the review was actually completed.

c. When facility restrictions are established or changed, review all **associated flight procedures.** Take particular care to evaluate unpublished procedures such as off-airway, direct, and substitute routes.

241. AVN-100 ACTION.

a. SIAPs, SIDs, ODPs, and STARs.

(1) Review at least once every two years.

(2) Review all feeder, initial, intermediate, final, circling, missed approach, and departure procedure areas for any changes that would affect flight altitudes. To avoid proliferation of conflicting data on IFPs at an airport, the periodic review should include all procedures at that airport (see paragraph 811a).

(3) Ensure that all procedures are contained within controlled airspace as prescribed in chapter 5.

(4) Ensure that minimums meet criteria. Review IFP forms for conformance to current standards. Check published IFPs for correct portrayal.

(5) Verify current magnetic variation values.

(6) Verify continued need for IFPs based on usage rate, economic need, etc. Cancel IFPs that are no longer required.

(7) Verify the validity of existing waivers. Cancel waivers no longer required.

b. Airways, Airway Segments, and Routes.

(1) Review at least once every four years.

(2) Verify controlling obstacles and assure that authorized altitudes meet obstacle clearance requirements. Use current en route charts as airway checklists.

(3) Verify continued need for off-airway and CFR Part 95 direct routes. Cancel routes that are no longer required.

c. Fixes.

(1) Review all fixes in conjunction with the associated IFPs, airways, or routes (see section 10). Assure that Form 8260-2 entries for facility type, class, radial/course/bearing, distances, least divergence angle, and charting requirements are correct. Verify holding requirements and controlling obstructions.

(2) Cancel fixes and holding which are no longer needed.

d. All Procedures.

(1) Establish and maintain a system of control to assure that reviews are accomplished.

(2) Take remedial action by NOTAM or revised 8260-series form.

(3) Review all associated waivers in conjunction with any procedure review.

(4) Annotate and incorporate editorial changes noted during the review in the next revision. Do NOT make IFP amendments solely to correct an MSA altitude except when the MSA provides less than 950 feet of obstacle clearance.

242-249. RESERVED.

SECTION 9. COMMUNICATIONS AND WEATHER

250. COMMUNICATIONS REQUIREMENTS.

Order 8200.1, U.S. Standard Flight Inspection Manual, section 211 defines communication tolerances and flight inspection procedures. Even though gaps in navigation course guidance may be approved, reliable communications coverage over the entire airway or route segment at minimum en route IFR altitudes must be available.

a. MEAs or MAAs are predicated upon continuous approved communications capability for the entire designated segment. All available resources must be explored before restricting the use of altitudes of an airway or route due to a lack of acceptable communications coverage. Coordination must be effected with ATC for determination of the acceptability of communications coverage in a particular area.

b. Mandatory communications with the appropriate ARTCC are not required; communications with other ATC facilities are allowable. Where necessary, in order to provide direct communications with a center, appropriate recommendations for a peripheral site should be made.

c. Communications requirements for non-14 CFR Part 95 routes certified for a particular air carrier are the responsibility of appropriate Flight Standards District Office (FSDO) operations inspector.

251. USE OF UNICOM.

UNICOM may be used to satisfy the communications requirements of Order 8260.3, Volume 1, paragraph 122e; however, there are limitations on its use that must be considered. According to FCC Rules and Regulations, Part 87, Subpart C, UNICOM stations are not authorized for ATC purposes other than the relay of the following information between the pilot and controller:

a. Revision of proposed departure time.

b. Time of takeoff, arrival, or flight plan cancellation.

c. ATC clearances, PROVIDED a letter of agreement is consummated by the licensee of the advisory station (UNICOM) with the FAA.

d. Weather information - only if there is no FAA control tower or Flight Service Station, or during periods when an FAA unit is not in operation. Direct transmission of approved altimeter setting to the pilot is authorized provided the procedure states an alternate course of action if UNICOM is not contacted.

NOTE: FCC regulation places the responsibility for the Letter of Agreement on the licensee, but FAA Handbook 7210.3 suggests that an ATC facility prepare the agreement. A communication capability between the UNICOM station and ATC is necessary to meet requirements of Order 8260.3, Volume 1, paragraph 122e.

252. AUTOMATIC ALTIMETER SETTING AND WEATHER REPORTING SYSTEMS.

Approved devices for automatically reporting altimeter settings and weather may be used to satisfy the requirements of Order 8260.3, Volume 1, paragraph 122d. Special notes will be required on the approach charts. Examples of standard notes can be found in paragraph 855f.

253-259. RESERVED.

SECTION 10. NAVIGATIONAL FIXES

260. GENERAL.

Criteria for navigational fixes are contained in Order 8260.3, Volume 1, chapters 2 and 17. When using a VORTAC or VOR/DME, fixes should be defined by DME from the facility providing course guidance in addition to radials or course intersections.

261. REPORTING POINTS.

Reporting points are established for use by ATC in the movement and separation of aircraft. Reporting points are divided into two categories, which are:

a. Compulsory reporting points are designated by regulation and, therefore, require rule making action. It is ATC's responsibility to initiate airspace rule making action for the designation of compulsory reporting points. Unless the reporting point can be identified at the lowest operational altitude, it must not be designated a compulsory reporting point.

b. Non-Compulsory reporting points may be established by ATC without the requirement for rule making action.

262. UNPLANNED HOLDING AT DESIGNATED REPORTING POINTS.

a. Where required for aircraft separation, ATC may request aircraft to hold at any designated reporting point in a standard holding pattern at the MEA or the minimum reception altitude (MRA), whichever altitude is the higher, at locations where a minimum holding altitude has not been requested. For this reason, the conditions to be considered for holding (obstacle clearance, communications, and facility performance) must be reviewed whenever reporting points are established or revised, even though specific holding authorization has not been requested by the ATC facility.

b. Unplanned holding at en route fixes may be expected on airway or route radials, bearings, or courses. If the fix is a facility, unplanned holding could be on any radial or bearing. Where standard holding cannot be accomplished at the MEA or MRA, any necessary limitations must be clearly indicated on Form 8260-2, Radio Fix and Holding Data Record.

263. REQUESTS FOR NAVIGATIONAL FIXES.

a. Form 8260-2 is the vehicle used to transmit requests for the establishment, revision, or cancellation of navigational fixes, holding patterns, and/or reporting points. All fix requests must be processed through AVN-100. AVN-100 may initiate Form 8260-2 for those navigational fixes that are required for the development of IFPs. Other operationally required navigational fixes must be coordinated with the appropriate ATC facility (see chapter 8, section 6).

b. Every effort should be made to use established fixes or NAVAIDs wherever possible in lieu of creating new fixes. Additionally, do NOT create a new waypoint over an existing fix or NAVAID.

264. NAMING NAVIGATIONAL FIXES. In order to satisfy the requirements of Flight Management System (FMS), the following applies for all procedures:

a. All navigational fixes must be named. On RNAV procedures, additionally chart associated ATD values for named stepdown fixes. Exceptions: Fixes used for navigation not to be named include Visual Descent Points (VDPs), radar fixes used on ASR and/or PAR procedures, RNAV missed approach point at threshold, a missed approach point determined by timing, and an ATD fix located between the MAP and the landing area marking the visual segment descent on COPTER RNAV PinS approach annotated "PROCEED VISUALLY." Except as noted below, each name must consist of a 5-letter pronounceable word. Obtain 5-letter names from NFDC. Name fixes collocated with a facility (named in accordance with Order 7400.2, chapter 3) the same as the facility. Navigational fixes to be named include:

(1) Intersections defined by radials and/or bearings.

(2) DME and Along-Track Distance (ATD) fixes.

(3) Stepdown fixes, regardless of segment in which located. Stepdown fixes between the FAF and MAP may be non-pronounceable 5-letter names.

(4) Missed Approach Points (MAP) not located at the threshold of the landing runway. This may be a non-pronounceable 5-letter name.

(5) Starting and ending points of arcs.

(6) Points where feeder or initial routes intercept the final approach course extended prior to the initial or intermediate fix. This includes cases where the intercept is via a heading. These are developed as computer navigation fixes.

(7) RNAV waypoints.

(8) Computer Navigation Fixes (CNFs). These are non-pronounceable 5-letter fix names used to aid in computer navigation and are not used in ATC communications.

(9) Fictitious Threshold Point (FTP). This is a CNF.

(10) VFR waypoints. These are non-pronounceable 5-letter names beginning with "VP." Example: VPXYZ

b. Coordinate with NFDC and the appropriate ARTCC when a fix name change is required. Document the change on Form 8260-2.

265. DOCUMENTING NAVIGATIONAL FIXES.

a. All named civil and military fixes must be documented and approved on Form 8260-2. Chapter 8 of this order contains instructions for entering data and submitting Form 8260-2.

b. Military fixes are also maintained in the National Data Base and are used to support the air traffic system. Therefor e, the requirement to document and flight inspect military fixes must receive the same priority as the fixes that support civil procedures.

266. CORRELATION OF NAVIGATIONAL FIXES AND CHANGEOVER POINTS (COPS).

The designation of navigational fixes should be directly related to COPs. Care should be taken to avoid designating navigational fixes that require the use of a facility beyond the COP. Figure 2-6 is an example of the proper and the improper method of designating a navigational fix in relation to COPs.

NOTE. These diagrams illustrate a problem encountered when handling intersections and changeovers. Make certain the entire complex is reviewed to prevent establishing procedures that are in conflict with the usability of the facilities involved.

267. MINIMUM RECEPTION ALTITUDES (MRA).

At certain navigational fixes, VOR reception from an off-course facility may not be adequate at the lowest MEA associated with the route segment. In such cases when the MRA at the fix is higher than the MEA for instrument flight, the MRA must be established for the fix and indicated on Forms 8260-2 and 8260-16. Once established, an MRA will not be revised unless the reception altitude is changed by 200 feet or more (see paragraph 905d(2)(e)).

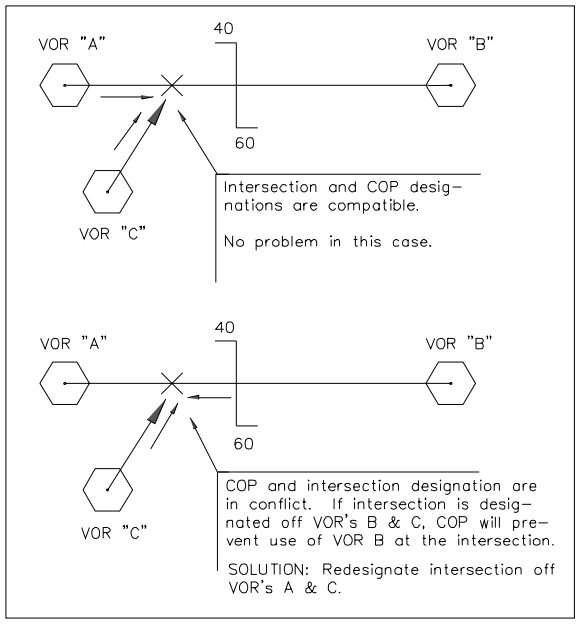

Figure 2-6. PROPER AND IMPROPER METHOD OF DESIGNATING A NAVIGATIONAL FIX

268. FLIGHT INSPECTION.

After completion of required coordination, flight inspection personnel must confirm facility performance at the proposed operational altitudes. Where possible, determinations must be predicated on current facility performance records; otherwise, a flight check must be accomplished.

269. MAXIMUM AUTHORIZED ALTITUDES (MAA).

MAAs are procedural limits that might be determined by technical limitations or such other factors as limited airspace or compatibility with other procedures. Where MAAs are required in connection with the publication of flight procedures, they are included on Forms 8260-2 and 8260-16, or worksheets used to process the data (see also paragraph 841d(2)(e)).

SECTION 11. OBSTACLE DATA

270. GENERAL.

The primary purpose of obstacle evaluation is to determine how an object will impact instrument flight procedures. The evaluations provide accurate, consistent, and meaningful results and determinations only if procedure specialists apply the same rules, criteria, and processes during development, review, and revision phases. This section also provides basic information regarding obstacle data sources; establishes the minimum accuracy standards for obstacle data and its application in the development, review, or revision of instrument procedures; and provides information on the application of the minimum accuracy standards. The minimum standards, regardless of the data source, are to be applied by instrument procedure specialists in all instrument procedure obstacle evaluations.

271. OBSTACLE DATA SOURCES.

a. The Aeronautical Information Branch, AVN-510, maintains an obstruction data file that includes a record of verified obstacles that are 200 feet or more above ground level. It also has information on a number of unverified obstacles that are below this height and documents certain information on terrain elevations. AVN-510 will provide obstacle data to AVN-100 as necessary for procedure development under current AVN internal procedures. AVN-510 will provide obstacle data to other FAA offices on a time available basis. Requests for obstacle data within a designated geographical area should identify the area desired by geographical coordinates or by a specified radius from an airport reference point (ARP) or navigation facility.

b. Absence of obstacle data in an electronic database and/or lack of survey data specified in AC 150/5300-13, Appendix 16, does not preclude development of an instrument procedure. When survey data is not available, use the best available source of obstacle data, e.g., terrain maps, DTED, etc.

272. OBSTACLE DATA ACCURACY STANDARDS FOR INSTRUMENT PROCEDURES.

This paragraph identifies the MINIMUM requirement for accuracy of obstacle data used in the development of instrument procedures, and provides minimum accuracy standards for each instrument procedure segment.

a. Concept. Obstacle data accuracy is not absolute, and the accuracy depends on the data source. The magnitude of the error does not preclude the use of these data, provided it is identified and accounted for. In some cases, upgrading obstacle accuracy can provide relief from operational restrictions in an instrument procedure. This will allow expenditure of funds for obstacle surveys in areas where benefit to the aviation community would result. In no case, however, will the application of obstacle data accuracy preempt the requirement for the flight check of an instrument procedure for discrepancies. For sources of obstacle data accuracy, see appendix 2.

b. Standards. The minimum accuracy standards in this order are for use in the development, review, and revision of instrument procedures. They must be applied to all new procedures and to existing procedures at the next revision or periodic review, whichever occurs first. The minimum accuracy standards are listed in paragraphs 272b(1) through (5). ADJUST the location/elevation data of the segment-controlling obstacle by the amount indicated on the assigned accuracy code ONLY, if that assigned code does not meet or exceed the following standards. For example, if the nonprecision final segment controlling obstacle has an assigned accuracy code 4D, adjust its location data by +250′ laterally, and its elevation data by +50′ vertically; this is because 4D does not meet or exceed the minimum accuracy requirement of +50' horizontal and +20′ vertical (2C) applicable to the nonprecision final segment.

(1) +20′ horizontal and +3′ vertical accuracy. Precision and APV final and missed approach segments.

(2) +50′ horizontal and +20′ vertical accuracy. Nonprecision final segments; missed approach 40:1 surface evaluation; circling areas. For ODPs and SIDs, the Initial Climb Area (ICA).

(3) +250′ horizontal and +50′ vertical accuracy. Intermediate segment. For DPs and SIDs, all areas outside of the ICA.

(4) +500' horizontal and +125' vertical accuracy; (1000' ROC and Special ROC); (non-mountainous). Initial segments; feeder segments; en route areas; missed approach holding/ level surface evaluation; MSA; ESA; MVA; EOVM; MIA; DF Vector Areas. For SIDs: level route portion.

(5) +1000' horizontal and +250' vertical accuracy; (2000' ROC) (mountainous). Feeder segments; en route areas; ESAs, DF Vector areas. For SIDs: level route portion.

(6) In all cases, if it is determined that the horizontal and/or vertical uncertainty adjustment associated with the controlling obstacle must be applied, **application must be in the most critical direction;** e.g., applied in the horizontal and/or vertical direction which most adversely affects the procedure.

(7) If the controlling obstacle elevation plus accuracy code adjustments affects a minimum altitude or gradient, and a higher order of accuracy could reduce an adverse operational effect, then take action to have the accuracy improved; or adjust the procedure accordingly (see paragraph 273).

(8) Take no further action if the controlling obstacle elevation plus accuracy code adjustment does not affect a SIAP minimum altitude or gradient.

(9) AVN-100, in coordination with Air Traffic, must determine the accuracy standard to apply in the evaluation of a proposed obstruction, and to apply in the development/revision of any affected procedures.

c. IAPA Data Base. The IAPA obstruction database file contains obstacle location and elevation data as provided to AVN by NACO. The data contains both verified and unverified obstacles. Discrepancies in the IAPA obstacle database found in the development, review, and revision of instrument procedures must be identified to AVN-160C

273. ACCURACY STANDARDS APPLICATION.

Adjust the instrument procedure to meet the requirements of the minimum accuracy standards. When an altitude adjustment is required which would adversely affect the procedure minimums, evaluate the nature, magnitude, and rationale for the adjustment; then review records to identify an existing source validating a higher level of accuracy which could preclude the need for adjustment. Where the review fails to produce an improved accuracy source, notify the appropriate Airports Division for assistance relative to existing obstructions; or notify the appropriate Air Traffic Division when the review involves a proposed structure or modification to an existing structure being studied in the Obstruction Evaluation (OE) program. AVN-100 need not delay further processing of affected procedures pending receipt of higher level accuracy data ONLY where operationally prudent.

a. Manual. When manually developing the procedure, identify all controlling obstacles on Form 8260-9 in coordinates to the second, and assign the highest order of accuracy known for the data source (see paragraph 860).

b. IAPA. When using IAPA to develop the procedure, apply the accuracy standards as follows:

(1) Obstacle accuracy standards must be applied when determining the altitude(s) to be charted.

(2) If segment altitude adjustments are made to meet the requirements of the minimum accuracy standards, state the reason for the adjustment on the applicable menu.

c. Evaluation Sequence. In either paragraph 274a or b, first determine the controlling obstacle using raw obstacle data. Then add horizontal/ vertical accuracy code adjustments to the raw values to determine the obstacle's most adverse location and elevation. Accuracy code adjustment is not applied to obstacles evaluated relative to Order 8260.3, Volume 1, paragraphs 289 or 332.

274. CONTROLLING OBSTACLES.

To reduce the time for instrument procedure development and flight inspection controlling obstacle verification, determine the controlling obstacle in all segments of instrument procedures except the final segment, circling areas, and specified areas underlying the missed approach or departure routes (see exceptions in paragraph 274a(2)). Use the highest terrain elevation plus an Adverse Assumption Obstacle (AAO) height of 200 feet above ground level (AGL) to establish a preliminary controlling obstacle. Then use the obstacle database information to determine if there is a higher obstacle on which

segment altitudes should be based. For final, missed approach, circling, and departure routes/areas, apply the following:

a. Final and Circling Segments: Use the obstacle database to determine the controlling obstacle and then evaluate the terrain to determine if it is higher than the controlling obstacle. If the terrain is higher, then use it and the applicable vegetation to determine the controlling obstacle. If the terrain is not higher, then use the controlling obstacle from the obstacle database.

(1) For precision SIAP final segments, the controlling obstacle is that obstacle which, having penetrated the obstacle clearance or transitional surface, requires the highest glide slope above 3° and/or causes the most adverse decision altitude (DA) adjustment. Where there are multiple penetrations, first determine the required DA adjustment for each obstacle using raw obstacle data. Then, having determined the controlling obstacle, recalculate the required DA adjustment using accuracy code adjusted data.

(2) For APV final segments, the controlling obstacle is that obstacle which causes the most adverse DA or requires the highest vertical path angle (VPA) above 3°.

(3) For nonprecision final segments, the controlling obstacle is the obstacle in the primary area (or secondary area equivalent) which has the highest elevation. At airports with all runways 3,200 feet or less that lack adequate obstacle information, use the highest terrain elevation plus an Adverse Assumption Obstacle (AAO) height of 200 feet above ground level (AGL) to establish a preliminary controlling obstacle.

b. Missed Approach and Departure Procedures: Determine the specified areas for the missed approach and departure procedures as follows:

(1) For airports with at least one runway longer than 3,200 feet, excluding heliports, draw an arc radius of 20,000 feet from the center of the end of each useable runway. Treat each runway independently and connect their arcs with tangent lines. Terrain outside those areas will receive AAO application.

(2) For airports with no runway longer than 3,200 feet, excluding heliports use an arc radius of 10,000 feet.

(3) For heliports with one helipad use radius of 5,000 feet from the center of helipad. When multiple helipads exist, use the center of each helipad and then join the extremities of the adjacent arcs with lines drawn tangent to the arcs.

(4) For the portions of the missed approach and departure procedure that overlie this specified area, use the existing database information to determine if a controlling obstacle exists; then evaluate terrain to determine if it is higher than the controlling obstacle. If the terrain is not higher, then use the controlling obstacle from the obstacle database.

(5) For the portions of the missed approach and departure procedure that lie outside these areas, use the same guidance as specified in paragraph 274.

(6) A missed approach controlling obstacle is that obstacle which, having penetrated a missed approach obstacle clearance surface, causes one of the following:

(a) Highest **DA/MDA**;

(b) Most adverse **MAP relocation**;

(c) Highest **climb gradient** for ILS CATs II or III (or any other procedure with waiver).

(7) A missed approach level surface-controlling obstacle is that obstacle in the primary (or secondary equivalent) which has the highest elevation.

(8) For all ODPs/SIDs, the controlling obstacle is that obstacle which, having penetrated the 40:1 Obstacle Identification Surface (OIS), causes the most adverse climb gradient and/or ceiling and visibility to be published.

275. VERTICAL DATUMS.

Use the following in the implementation of the North American Vertical Datum of 1988 (NAVD 88):

a. For the NACO vertical obstruction file and airport surveys, NGVD 29 and NAVD 88 are

considered equal since the difference between the two vertical datums is less than the vertical accuracy of the obstructions.

b. Airport surveys, engineering drawings, and Airport Layout Plans must be updated by attrition as new surveys are provided. Since June 1999, all National Geodetic Service survey data has been provided in NAVD 88 for geographic areas where NAVD 88 is defined.

c. The determination of the landing threshold point (LTP) height above the ellipsoid (HAE) must be based on NAVD 88 when developing WAAS/LAAS instrument procedures. The LTP HAE will be reported on the Form 8260-3. Ellipsoid height may be obtained from the ASIS data sheet. Other airport data will be reported in the orthometric datum of the airport survey.

276-279. RESERVED.

SECTION 12. WAIVER OF STANDARDS

280. GENERAL.

Submit a request for a waiver of flight procedures standards on an approved computer generated Form 8260-1, Flight Procedures Standards Waiver (see paragraph 830). Each waiver request will be considered ONLY when there is no other suitable way to resolve a procedural problem, or to provide a required service. The waiver is used to officially document the nonstandard application of criteria, and serves as a means to identify criteria that may require further refinement or to identify problem areas.

NOTE: Those items identified in TERPS as "requires approval by Flight Standards Service" (e.g., GP angle above 3.00°, climb gradient in excess of 500 ft/NM, etc.,) are not to be interpreted as a requirement for a waiver and do not require completion of a Form 8260-1. A request of this type is made in plain text by memorandum and submitted to AFS-420 for approval.

281. WAIVER PROCESSING.

Request waivers by completing the front of Form 8260-1. Detailed instructions for completing the form are contained in chapter 8, section 5. Figures 8-1 & 8-2 provide an easy reference for waiver form processing and routing requirements.

a. Forward the original Form 8260-1 and supporting data for approval to AFS-400 through AFS-420. For U.S. Army procedures, forward waiver requests for approval to the U.S. Army Aeronautical Services Agency (USAASA) or U.S. Army Aeronautical Services Detachment-Europe (USAASDE). Use the specially adapted automated version of the Form 8260-1 for U.S. Army waiver processing.

b. Complete documentation and supporting data must accompany the waiver request so reviewing offices can conduct an evaluation without additional research. Submit appropriate 8260-series forms with each request. Include charts depicting the procedure and/or obstacles that are the subject of the waiver.

c. Enter only one waiver request on the waiver form.

d. When a procedure is amended, reprocessing of an existing waiver is not necessary unless the reason for the amendment directly impacts the basis for the waiver.

e. When a waiver is proposed for obstacle penetration of ILS final or straight missed approach surfaces, request a Collision Risk Model (CRM) study through AFS-420. Refer to Order VN 8260.4, ILS Obstacle Risk Analysis. At the time of the request, provide all data required for conducting the study. AFS-420 then analyzes and interprets the result of the CRM and provides the results to AVN-100.

NOTE: The CRM does not assess Category E aircraft.

f. The Flight Procedure Standards Branch, AFS-420, reviews all waiver requests, and develops and forwards the proposed Flight Standards endorsement to AFS-400 for final action. When necessary, Flight Standards will annotate the Form 8260-1 that approval is contingent upon a successful flight inspection report.

g. AVN-100 is responsible for ensuring that an approved waiver of standards is on file for each instrument procedure requiring waiver action. AFS waiver approval must be obtained before submitting the procedure to NFDC for publication.

282. WAIVERS FOR SPECIAL INSTRUMENT APPROACH PROCEDURES.

Except for proponent developed procedures, when a waiver is approved for a special instrument approach procedure, Flight Standards must coordinate with the appropriate FSDO concerning any special conditions that may be imposed on the use of a special authorization. This action is necessary to establish required supervision to ensure user compliance with equivalent level of safety provisions. For example, special aircrew training may be required as an equivalent level of safety.

283. PERIODIC REVIEW OF WAIVERS.

AVN must review approved waivers biennially to determine whether the waivers are still required. Cancel unnecessary waivers.

284. CANCELLATION OF WAIVERS.

a. Cancellation of waivers must include a reason in the comments block. Such termination may be directed by AFS-400. AVN is responsible for planning ways to eliminate waivers through the modification, addition, or relocation of navigation facilities.

b. Distribution of a canceled waiver must be made to the same organizations that received the approved waiver (see paragraph 830).

285-289. RESERVED.

SECTION 13. IAPA PROCEDURES DEVELOPMENT AND PROCESSING

290. GENERAL.

The Instrument Approach Procedure Automation (IAPA) system has been developed and is being incrementally implemented. In addition to automated procedure development, the system provides for automated storage and transmittal of instrument flight procedures. AVN-100 should use the IAPA system to develop fixed-wing, original or amended, non-directional beacon (NDB) and Very High Frequency Omni-directional Range (VOR) SIAPs; and Global Positioning System (GPS) instrument procedures to the extent permitted by approved IAPA programming. Use of IAPA is not mandatory; however, because IAPA ensures accurate computations and approved interpretation of criteria, it must be used to the maximum extent permitted by certified software programming.

a. Waivers. The standardized, programmed criteria must be applied to develop and store SIAPs using the design sequences of IAPA software. For nonstandard application of criteria, a waiver must be on file or initiated. IFPs having design requirements or waivered construction that cannot be processed on IAPA must be completed manually.

b. Other IFP types or additional instrument procedures should be developed on IAPA as software programming permits. Additional software programs to support these IFPs and other instrument procedures will be implemented at a later date as time and resources permit.

291. IAPA RECORDS DISPOSITION. Use guidelines and procedures identified in Order 1350.15, Records Organization, Transfer, and Destruction Standards, to determine the correct disposition standards for all records created using the IAPA system.

292-299. RESERVED.

CHAPTER 4. TERMINAL PROCEDURES

SECTION 1. GENERAL

400. GENERAL.

The FAA has the responsibility to establish instrument procedures used for terminal operations at civil airports within the United States and its possessions. The FAA also provides or approves instrument procedures used by U. S. flag carriers at foreign airports.

401. CATEGORIES OF INSTRUMENT APPROACH PROCEDURES.

Procedures published in the Federal Register under 14 CFR Part 97 are identified as "Standard Instrument Approach Procedures" (SIAPs). These procedures are available to all users. Instrument flight procedures authorized for use only by air carriers or some other segment of the aviation industry are not published in the Federal Register and are identified as "Special Procedures." Special Procedures may be developed for public and private use based on aircraft performance, aircraft equipment, or crew training, and may also require the use of landing aids, communications, or weather services not available for public use (see paragraph 872).

402. AIRSPACE REQUIREMENTS.

a. Public use procedures and Special procedures at Part 139 airports must be contained within controlled airspace to the maximum extent possible as specified in Order 7400.2, Procedures for Handling Airspace Matters.

b. Where an airport does not qualify for a Class B/C/D/E surface area, designate Class E 700′ airspace. In the latter case, landing minimums may be established below the floor of controlled airspace. A requirement for minor adjustment to existing controlled (Class B/C/D/E) airspace, to fully encompass an instrument procedure, will not form the basis for withholding procedure publication. An approach procedure may be published prior to obtaining the optimum configuration of controlled airspace when the following conditions exist (see Order 8260.26, Establishing and Scheduling Standard Instrument Procedure Effective Dates, paragraph 7d(2)):

(1) The centerline of all terminal routes is located within existing controlled airspace.

(2) The procedure turn area out to the appropriate distance specified in chapter 5 is contained within existing controlled airspace.

(3) The final approach fix is contained within existing controlled airspace.

c. Special procedures other than those noted in paragraph 402a, should, where possible, be contained within controlled airspace in accordance with Order 7400.2. Special procedures may be established and approved outside of controlled airspace where it is not possible to designate controlled airspace. In such cases, annotate the procedure: “Procedure not contained within controlled airspace,” and advise the appropriate FSDO that controlled airspace will not be provided. Do NOT use special procedures as a temporary measure pending designation of controlled airspace for public use procedures.

403. CONTRACTUAL USE OF PRIVATE FACILITIES.

An air operator may arrange for the use of a privately owned navigational aid (NAVAID). Such an arrangement requires a contractual agreement between the sponsor and the user regarding facility use. AFS must coordinate all requests for contractual use of private navigation aids with the sponsor. Approval of the special instrument procedure for an operator is contingent upon the RFSD receiving a copy of an acceptable contractual agreement. Refer to paragraph 708 for procedures for the first time approval of a non-Federal NAVAID.

404. TERPS APPLICATION.

Develop all instrument approach procedures, except foreign procedures developed in accordance with Order 8260.31, Foreign Terminal Instrument Procedures, under the provisions of TERPS, associated 8260-series orders, and the guidelines in this document. The following special provisions and guidelines apply to selected paragraphs of TERPS criteria. The paragraph numbers refer to identically numbered paragraphs in Order 8260.3, United States Standard for Terminal Instrument Procedures (TERPS).

a. Volume 1, paragraph 5a(2), Simultaneous Procedures. Where simultaneous operations are

authorized to parallel runways, or conflicting runways having similar operational problems as parallel runways, note the authorization on each individual ILS procedure. Identify the procedure in accordance with TERPS Volume 1, paragraph 161.

Example: **Simultaneous approach authorized with Converging ILS Rwy 36L/R, and Rwy 31R.**

b. Volume 1, Paragraph 122a, Airport. The runway lighting requirement does not apply to night instrument takeoff procedures.

c. Volume 1, Paragraph 122c, Obstacle Marking and Lighting. Do NOT deny instrument approach procedures due to inability to mark and light or remove obstacles that violate 14 CFR Part 77 surfaces. Exception: See TERPS Volume 1, paragraph 251b(2)(c). Objects that penetrate these surfaces are normally studied by AVN-100 prior to construction or alteration. AVN-100 recommendations for marking, lighting, or removal are made at that time.

d. Volume 1, paragraph 151, Coordination Conflicts. AVN-100 must make every effort to resolve coordination conflicts, and must thoroughly evaluate objections received as a result of coordination or by direct inquiry. This evaluation should determine the validity of the comments and the course of action to be taken:

(1) Acknowledge the comments and amend or withdraw the procedure; or

(2) Determine that the procedure is correct as submitted. All adverse comments received, through formal coordination, must be answered in writing. Conflicts, which cannot be resolved by the region, must be forwarded to the Flight Procedure Standards Branch, AFS-420, with an information copy to the commenting agency.

e. Volume 1, paragraph 160, **Identification of Procedures.** Military operators have stated a requirement for TACAN instrument approach capability to a limited number of airports. These airports have a prescribed VOR procedure, based on a VORTAC facility, where TACAN-equipped aircraft are expected to operate. TACAN-equipped aircraft may execute VOR procedures at these locations when the procedure is identified as **"VOR or TACAN."** This informs both the pilot and the controller that an approach may be executed with aircraft equipped with only VOR or with only TACAN. Approval of the use of individual VOR procedures by TACAN-equipped aircraft is subject to review for compliance with TERPS and flight check criteria. Take the following actions to implement this program:

(1) Designate VOR/DME procedures, predicated upon the use of VORTAC, as **"VOR/DME or TACAN"** provided flight inspection has determined that the TACAN and VOR components will support the procedure. These procedures require DME. Establish the missed approach clearance limit at a radial/DME fix in lieu of the VORTAC facility to accommodate aircraft equipped with only TACAN. FAF procedures identified ".../DME" are not authorized.

(2) Establish a VOR type procedure when a VOR procedure (no TACAN requirements) is required to accommodate non-DME equipped aircraft, and is predicated upon a VORTAC facility. However, establish combination VHF/DME fixes, where possible, for optional use by DME-equipped aircraft.

(3) Make provision for TACAN-only equipped aircraft to use VOR approach procedures when requested by the appropriate military authority, and procedure design and facility performance will permit. Where approval can be authorized, rename VOR procedures based on VORTAC facilities in accordance with the following examples: **"VOR or TACAN RWY 30, or VOR or TACAN-A."** Before this identification is used, flight inspection must determine that the TACAN azimuth alignment is satisfactory. Review and modify the procedure as necessary to fully support its use by TACAN-equipped aircraft:

(a) Establish the missed approach clearance limit at a combination VHF/DME fix for TACAN aircraft.

(b) Add DME fix capability to VHF intersections where required for TACAN use.

(c) Ensure that the procedure can be flown satisfactorily by reference to TACAN-only equipment.

(d) Ensure that the procedure can be flown satisfactorily by reference to VOR-only equipment.

(e) Ensure that holding is not authorized for TACAN-equipped aircraft at the VORTAC. This also applies to VOR/DME or TACAN procedures.

f. Volume 1, Paragraph 161, Straight-in Procedure Identification. When approaches meet straight-in criteria for parallel/multiple runways, name the procedures accordingly.

Examples: **VOR RWY 14L/R**
NDB RWY 26L/C
VOR RWY 5/7

g. Volume 1, Paragraph 162, Circling Procedures.

(1) Do not duplicate the alphabetical suffix for circling procedures at an individual airport to identify more than one circling procedure. If more than one circling procedure exists, and regardless of the final approach alignment or type of facility, use successive suffixes.

Example: **NDB-A, VOR-B, LDA-C.**

(2) The alphabetical suffix for circling procedures must not be duplicated at airports with identical city names within one state. Regardless of the airport name, successive suffixes must be used for all airports that serve the same city.

Examples:

State	City	Airport	Procedure
Georgia	Atlanta	Municipal	VOR-A
Georgia	Atlanta	DeKalb	NDB-B
Georgia	Atlanta	Fulton	VOR-C

h. Volume 1, paragraph 172, Effective Dates. See Order 8260.26. FAA policy does not permit the issuance of complete civil instrument approach procedures by NOTAM.

i. Volume 1, paragraph 221b, Emergency Safe Altitudes. This paragraph does not apply to civil procedures.

j. Volume 1, paragraph 240, Intermediate Approach Segment. An intermediate segment must be developed and depicted on all graphically published instrument approach procedures. In determining intermediate altitudes and intermediate fix locations, consideration must be given to Air Traffic requirements and the establishment of an approximate 3° descent for the nonprecision final approach segment.

k. Volume 1, paragraph 241, Altitude Selection. The FAF altitude must not be less than the highest straight-in or circling MDA, including adjustments.

l. Volume 1, paragraph 250, Final Approach Segment. For nonprecision approaches, the final approach segment area considered for obstacle clearance begins at the FAF and ends at the runway or missed approach point, whichever is encountered last. This concept applies to TERPS Volume 1, paragraphs 513, 523, 713, 903, and 1044. For precision approaches, the area considered for obstacle clearance begins at the precision final approach fix (PFAF) (i.e., glide slope intercept point) and ends at a point 200 feet outward from the threshold (see TERPS Volume 3).

m. Volume 1, paragraph 261, Circling Approach Area Not Considered for Obstacle Clearance. Sectorize the circling area only to deny circling within a prescribed area.

n. Volume 1, paragraph 270, Missed Approach Segment. The missed approach altitude must not be less than the highest MDA, including adjustments.

o. Volume 1, paragraph 283. Fixes formed by Radar. Coordinate with the appropriate air traffic facility before establishing a radar fix to assure the facility agrees to provide radar fix service when requested or required. When an air traffic facility advises that they can no longer provide radar fix service, revise procedures to remove the radar fix.

p. Volume 1, paragraphs 275, 277b, 1033, 1035b, Turning Missed Approach/Turning Area.

(1) The missed approach segment must be constructed with consideration given to all categories of aircraft. Plotting only the highest or heaviest authorized aircraft category area will not assure proper area evaluation for lower categories. Construct turning areas for the lowest and highest aircraft categories for turns at the MAP; or for turns at the end of the straight portion of the combination straight and turning missed approach. Where obstacle penetrations exist, evaluate the appropriate area for each category to determine specific aircraft category impact.

(2) Section 2 boundary terminates at Point B (or Point C for ILS or PAR) **only** if a fix exists at the end of section 1 **and** if course guidance is provided in section 2

q. Volume 1, paragraph 287c, Final Approach Fix (FAF). If the buffer or 40:1 surface evaluation identifies an obstacle penetration, you may clear the problem by increasing the minimum descent altitude (MDA) by the amount of obstacle penetration. When applying the buffer to a straight missed approach segment with positive course guidance, the area between the missed approach point (MAP) and the 40:1 rise-starting point is considered missed approach primary area. The 12:1 surface begins where the 40:1 rise starts.

r. Volume 1, paragraph 311. When Category E minimums are required on civil procedures, use TERPS table 10 to establish visibility minimums. Category E minimums must not be less than that required by table 9.

s. RESERVED.

t. Volume 1, paragraph 323b, Remote Altimeter Setting Source. Whether the use of a remote altimeter setting is primary or full-time, or secondary to a local source, establish the required visibility as stated in paragraph 404u.

u. Volume 1, paragraph 330, Establishment of Visibility Minimums. For nonprecision approaches, use TERPS Volume 1, paragraphs 330c(1) and (2) and 251 to determine the minimum no –lights visibility. For precision approaches, TERPS Volume 1, paragraphs 251, 330c(1), and 350 apply.

(1) Circling minimums must not be less than no-lights straight-in minimums.

(2) Visibility based on the distance direct from MAP to threshold must be rounded to the next higher reportable value.

(a) When the visibility without light credit is less than 3 statute miles (SM), round the no-light visibility to the next higher quarter mile; e.g., 1.75 remains 1.75 SM, but 1.76 becomes 2 SM.

(b) When the visibility without light credit is greater than 3 SM, round the no-light visibility to the next higher whole mile increment; e.g., 4.00 remains 4 SM, but 4.01 becomes 5 SM.

v. Volume 1, paragraph 333, Runway Visual Range (RVR). RVR must be authorized on adjacent runways, when segments of those runways are located within a 2,000′ radius of the transmissometer location and the requirements of TERPS Volume 1, paragraph 334 are met.

(1) RVR must be authorized in accordance with the following. See Order 6560.10, Runway Visual Range (RVR):

(a) Category II/III Rollout RVR. Threshold plus 2,000′ of runway required within the 2,000′ circle.

(b) Category I ILS and nonprecision touchdown RVR. Threshold plus 1,200′ of runway required within the 2,000′ circle.

(c) Mid-field RVR. 2,000′ coverage of runway centerline including the runway midpoint required within the 2,000′ circle.

(2) When a transmissometer serves more than one runway and a Category II/III runway is involved, the touchdown RVR will be sited with respect to the Category II/III runway. RVR installations meeting requirements for use on adjacent runways may be used for reducing standard takeoff visibility.

(3) AVN-100 must determine, in conjunction with Airway Facilities (AF), the following:

(a) Planned RVR installations, proposed commissioning dates, and runways to be served.

(b) Runways that meet the requirements for authorizing RVR.

(c) RVR installations that are to be used to report RVR for adjacent runways and the effective date of the procedures.

(4) AVN-100 must revise affected procedures by the normal abbreviated or full amendment process.

w. Volume 1, paragraph 334, Runway Requirements for Approval of RVR. If runway markings are removed or obliterated subsequent to the commissioning of the RVR, the RVR minimums may require adjustment. However, before an adjustment is

made to the minimums, AVN-100 should advise the airport sponsor of the proposed course of action. Where corrective action cannot be accomplished within a reasonable length of time, AVN-100 must submit a revised procedure reflecting the adjustment to landing minimums.

x. Volume 1, Paragraph 343, Visibility Reduction. The runway alignment indicator light (RAIL) portion of a MALSR or SSALR must be operating in order to retain visibility reductions authorized in TERPS table 9. Unattended approach light systems that have a radio control device for a pilot to exercise control over the system, qualify for the same minimums as light systems that are controlled from a ground position.

y. Volume 1, paragraph 360, Standard Alternate Minimums. Do not authorize alternate minimums when the facility providing final approach guidance is a Category III monitored facility. If a procedure has a stepdown fix predicated on a Category III monitored facility, establish alternate minimums no lower than the minimum altitude without the fix. See TERPS Volume 1, paragraphs 213c(1) and (2). Standard alternate minimums provide a margin of safety over basic straight-in landing minimums. Where higher than basic landing minimums are required, consider an equivalent increase for the alternate minimums, particularly at remote airport locations. Similar consideration should be given when establishing alternate minimums at airports served by a single instrument approach which authorizes circling minimums only.

z. Volume 1, paragraphs 413a(2), 513a(2)(b), 613a(2), and 713a(2)(b). Circling approach alignment criteria, using on-airport facilities, permits the use of all radials (360 degrees). It is not a requirement for the final approach course to pass through a portion of the landing surface.

aa. Volume 1, paragraphs 613c, 613e, and 713c. These paragraphs allow military procedures to apply a reduced ROC on NDB approach procedures. Military procedures developed utilizing this reduced ROC are for military use only. Develop civil procedures at joint civilian/military airports utilizing civil TERPS criteria. Where the military requests development of instrument approach procedures, or military use of existing civil procedures utilizing reduced ROC at joint civilian/military airports, annotate these procedures "NOT FOR CIVIL USE," and effect documentation under appropriate FAA/military directives for separate DO D publication.

bb. Volume 1, paragraph 907 and Volume 3, paragraph 3.9, Missed Approach Segment. The missed approach area dimensions for the localizer differ from those of the full ILS, unless the MAPs are collocated. Evaluate both missed approach areas for obstacle clearance requirements. Provide a single missed approach procedure to serve both ILS and localizer approaches. An LDA, localizer-only, localizer back course, or SDF missed approach point must be at least 3,000′ prior to the localizer facility. For precision approaches, or where a glide slope is used, the DA/MAP must be no closer to the localizer antenna than a point where the localizer is 400' wide. See Order 8200.1, paragraph 217.3206a.

cc. Volume 4, paragraph 1.2, Departure Criteria Application.

(1) Apply diverse departure criteria to all runways at airports where public or special IFPs exist, and the FAA is the approving authority. If restrictions are not imposed, expect aircraft departures in all directions from all runways.

(2) If restrictions (40:1 surface penetrations) are identified for a specific runway in the diverse review, apply guidance established in Order 8260.46, Departure Procedure Program.

dd. Volume 1, paragraph 1501r. Interpolate tables 15-1 and 15-2 or use the next higher values.

ee. Volume 1, paragraph 1502g. Establish only one stepdown fix in a LORAN SIAP final segment.

ff. Volume 1, paragraph 1512a. The 120° turn limitation does NOT apply for a feeder-to-initial segment connection where the initial segment is a course reversal.

405. SIDESTEP MANEUVERS. A sidestep maneuver is the visual alignment maneuver, required by a pilot executing an approach to one runway and cleared to land on a parallel runway. The following conditions must exist:

a. Runway centerlines are separated by 1,200′ or less.

b. Only one final approach course is published.

c. Course guidance is provided on the runway centerline or within 3° of the runway centerline of the primary runway.

d. The procedure is identified in accordance with TERPS Volume 1, paragraph 161.

e. Final approach areas must be established for both runways and must be determined by the approach guidance provided. Both final approach areas must be used to determine the MDA to the sidestep runway.

f. Use the same nonprecision obstacle clearance used for the primary runway to determine the published MDA for the sidestep maneuver.

g. Establish published visibility in accordance with TERPS Volume 1, table 6 or 11, whichever is higher.

(1) One-half mile visibility reduction is authorized if ALS, MALSR, or SSALR is installed to the sidestep runway. The minimum visibility after applying credit for lights must be no less than 1 mile.

(2) Visibility must be increased 1/4 mile when the "sidestep" runway threshold is over 1,000′ closer to the FAF than the runway with course guidance.

NOTE: If descent gradient is exceeded, the sidestep maneuver must NOT be authorized.

h. Sidestep minimums must be published in accordance with the example below:

Minimums block*:*

S-ILS 27L
S-LOC 27L
SIDESTEP 27R
CIRCLING

406. Temporarily Displaced/Relocated Threshold Procedures. Temporarily displacing, relocating, or moving the threshold may have an adverse effect on instrument approach/departure procedures. If an instrument procedure to the affected runway is required during the time of threshold displacement, evaluate existing instrument procedures as follows:

a. Once the new threshold/departure end has been established, obstacles that lie within the displaced area (machinery, vehicles, etc.) must be evaluated to ensure the procedure continues to meet TERPS criteria. If used at night or in IFR conditions, runway lighting must include threshold lighting for the displaced threshold.

b. Approach lights will not be usable for taking a reduction in visibility minimums. Re-compute no-light minima, adding the amount of displacement to the "MAP-to-Threshold" distance.

c. Suspend vertically guided approach operations by NOTAM. This includes RNAV procedures that contain LPV and/or LNAV/VNAV minima. Airway Facilities is responsible for turning off the ILS/MLS glide slope until the normal runway configuration is restored.

(1) There may be situations where the threshold is displaced only a short distance without affecting vertically guided approach capability. To determine if such procedures can remain useable, the relocated TCH must be computed and be in compliance with TERPS table 2-3. Consideration must also be given to what may be located in the closed portion of the runway and the TERPS OIS must be evaluated to ensure proper obstacle clearance.

(2) Special instrument procedures must also be afforded the same assessment as standard instrument procedures. The results must be provided to the Region All Weather Operations Program Manager (AWO/PM) so that the change information is provided to all the recipients of the Special procedure affected.

d. Visual glide slope indicator systems (VASI/PAPI/PLASI) may be unavailable for the same reason as the vertically guided approach.

e. The elevation of the new threshold, touchdown zone, and airport will more than likely change. In this case, evaluate the revised HAT/HAA for visibility impact and NOTAM changes accordingly. The new temporary HAT/HAA/THLD/field elevation values must be NOTAMed only when necessary for safety of flight.

f. Evaluate departure procedures for use during threshold displacement from the new DER to assure compliance with TERPS.

407-419. RESERVED.

SECTION 2. STANDARD INSTRUMENT APPROACH PROCEDURES (SIAP)

420. GENERAL.

SIAPs must be established in accordance with Order 8260.3, other specific FAA 8260-series orders, and the policies set forth in this order. FAA policy and instructions for completing FAA 8260-series forms are contained in chapter 8.

421. COORDINATION OF TERMINAL INSTRUMENT PROCEDURES.

Coordination requirements for terminal instrument procedures are set forth in TERPS, chapter 1, section 5. See paragraph 811d.

422. RADAR INSTRUMENT APPROACH PROCEDURES.

ATC personnel determine which runways require radar instrument approach procedures and coordinate these requirements through AVN-100.

423-429. RESERVED.

SECTION 3. VISUAL DESCENT POINT (VDP)

430. ESTABLISHMENT. The VDP defines a point on a straight-in nonprecision approach where a normal descent from the MDA would commence if the required visual references were acquired.

a. Establish a VDP provided the SIAP meets the requirements of TERPS Volume 1, paragraphs 251, 252, and 253.

b. For chart clarity, a VDP should be no less than (1 mile OPTIMUM) (0.5 miles MINIMUM) from a final segment fix or MAP. If proximity closer than 0.5 miles is required, consider one of the following actions:

(1) Do NOT establish a VDP.

(2) Relocate the fix to the VDP location, and do NOT establish a VDP.

(3) Relocate the fix to accommodate the 0.5 mile (or greater) requirement.

NOTE: Option (2) above increases MDA and descent angle. Option (3) increases S/D altitude.

c. Do NOT adjust visibility minimums to accommodate a VDP.

d. Where used, the DME source must be the same as the DME source for DME fixes in the final segment.

431. FAA FORM 8260-9 ENTRIES. To facilitate review, entries may be required in the REMARKS section. Where a VDP is not established, give the reason; e.g., obstacles penetrate VDP surface, descent gradient, proximity to final approach segment (FAS) fix, etc. (see paragraphs 857q and 860c).

432-439. RESERVED.

SECTION 4. SPECIAL INSTRUMENT PROCEDURES PROCESSING

440. INITIATING A REQUEST FOR SPECIAL INSTRUMENT PROCEDURES. Proponents will initiate Special instrument procedure requests using the Internet Web site http://www.mmac.jccbi/avn/iap. Proponents having already developed instrument procedures must submit them through their POI to the applicable Regional Flight Standards Division (RFSD), All Weather Operations Program Manager (AWO/PM) for approval and submission to the Regional Airspace and Procedures Team (RAPT) for action. See figure 4-1 for procedure processing flow diagram and paragraph 442 for procedure package content requirements.

NOTE: Responsibilities of the RAPT are identified in Order 8260.43, Flight Procedures Management Program.

441. PROCESSING REQUESTS.

a. Flight Standards District Office (FSDO)/ Certificate Management Office (CMO)/Operator Action.

(1) Participate in RAPT meetings as an FAA participant at the request of the RFSD, All Weather Operations Program Manager (AWO/PM) and RAPT chairman.

(2) Perform a preliminary assessment, based on the proponent's package content, as to the operational acceptability of the proposed procedure for further action, and make recommendations to the RAPT through the RFSD-AWO/PM.

(3) Forward the proponent's package, along with any recommendations to the RFSD-AWO/PM.

(4) Validate the operator's documentation (when required) for special conditions listed on the Form 8260-10.

(5) Issue the approved procedure under Order 8400.10, Volume 4, chapter 2, section 9. If additional users will be authorized, the applicable POIs and RFSD-AWO/PMs must be notified.

(6) Forward a copy of the proponent's approved charted procedure to AFS-420, the originating RFSD-AWO/PM, and the controlling ATC facility.

(7) When a Special procedure is not maintained by the FAA (see paragraph 442a), it is the proponent/operator's responsibility to notify the FAA (POI or RFSD-AWO/PM) if procedure maintenance responsibilities can no longer be met. The procedure must be cancelled until such time maintenance has been restored and the procedure has been re-evaluated to ensure currency (see paragraph 4.4.3.

b. RFSD-AWO/PM Action.

(1) Participate as CORE RAPT member.

(2) Complete the "Special Procedure Checklist" (See figure 4-2) prior to submitting the procedure to the FPO.

NOTE: The AWO/PM may provide the checklist to the proponent/developer to have them ensure all the items have been completed prior to submission.

(3) When Special procedures are received that were developed by the proponent/contractor, ensure all applicable coordination with Air Traffic, Airway Facilities, and/or FSDO has been completed in accordance with RAPT procedures.

(4) Provide oversight for issuance of all Special procedures within the region.

(5) Participate as a member of the AFS-400 procedures review board (PRB) to assist in determining that adequate operational specifications (OPSPECS) have been determined.

(6) Maintain a list by location, procedure, and operator(s), of all Special procedures issued within the jurisdiction of the region.

(7) Authorize issuance of approved Special procedures to additional requesters through the FSDO/CMO.

NOTE: Obtain AFS-400 pre-authorization for specifically identified procedures prior to issuance to additional operators.

Provide copy of enabling correspondence to AFS-420. (Specifically identified procedures are those for which AFS-400 has developed aircraft equipment and performance requirements, and/or specific operations including dispatch and pilot training requirements.)

(8) Distribute the approved procedure as noted in paragraph 444. (Distribution to ATA, ALPA, and APA applies for air carrier Specials.)

c. National Flight Procedures Office (AVN-100) Action.

(1) Regional FPO serves as RAPT Chairperson. The FPO must ensure the "Special Procedure Checklist" (Figure 4-2) has been completed prior to submission to AVN-100 for quality assurance review. If checklist is not complete, return the package to the AWO/PM for action.

(2) Coordinate reimbursable agreements as appropriate.

(3) Forward requests for procedures not covered by current criteria to AFS-420 for criteria development and processing.

(4) Develop waiver request in coordination with the proponent and the FSD/FSDO/CMO and forward to AFS-420 for further action. Provide flight inspection report (on request).

(5) Develop the Special procedure with current, waived, or new criteria as appropriate.

(6) Perform quality assurance review of Special procedures developed by the proponent, or internally within AVN-100.

(7) Coordinate flight inspection of the procedure.

(8) Forward completed procedure package to AFS-420 for approval coordination. See para-graph 442 for package content. When forwarding packages that contain revisions to existing procedures, the cover letter must include a paragraph describing all changes made.

(9) Maintain a file of appropriate correspondence for each Special procedure.

(10) Perform, as necessary and appropriate, biennial review, environmental assessment obstacle evaluation (OE), routine maintenance, and NOTAM action to ensure the safety, currency, and validity of the procedure(s) for which they have jurisdiction.

NOTE: These functions may be performed by a commercial service specified in the Special procedures checklist; see figure 4-2.

(11) Document for permanent file on Form 8260-10, the Office of Primary Interest (OPI) - including non-Governmental proponents/developers regarding responsibility for actions in paragraph 10, with a brief explanation of the process for accomplishment of each action item.

d. Flight Technologies and Procedures Division (AFS-400) Action.

(1) Participate as NAPT member.

(2) Provide signature approving authority for all Special procedures.

(3) Approve development of standards and criteria to support requests for Special procedures where no criteria exist.

(4) Provide signature approving authority for all waivers required for Special procedures.

e. AFS-200/800 Action.

(1) Assist AFS-410, when requested, in evaluating procedure packages from an operational standpoint to determine actions required where special training or aircraft equipment and/or performance may exist.

(2) Include in the operation evaluation of the procedure package flyability, regulatory compliance, complexity, specific crew qualifications, equipment and/or demonstrated performance requirements, recommendations for training, or other special operating requirements or considerations deemed necessary to execute the procedure.

f. Flight Operations Branch (AFS-410) Action.

(1) Special procedures based on STANDARD published criteria.

(a) Participate as a member of the Division Procedures Review Board (PRB).

(2) Special procedures requiring WAIVER of standard criteria or development of NEW CRITERIA.

(a) Participate as a member of the Division PRB.

(b) Evaluate waivers of Category II/III published criteria.

(c) Develop Flight Standards Information Bulletins as required.

(d) Develop special authorization requirements with AFS-200/800, FSD/FSDO, and AFS-400 branches, where special training or aircraft equipment and/or performance requirements may exist.

(e) Enter special authorization determination (including that no action is required) on Form 8260-10 and **permanently attach** to original package prior to approval signature.

g. Flight Procedure Standards Branch (AFS-420) Action.

(1) Special procedures based on STANDARD published criteria.

(a) Determine necessity for Division PRB reviews.

(b) Facilitate the Division PRB.

(c) Provide a copy of procedures subject to PRB review to AFS-410 prior to a PRB meeting.

(d) Coordinate AFS-400 signature/ approval of procedure.

(e) Maintain a record of all approved Special procedures.

(f) Distribute the approved procedure as noted in paragraph 444.

(2) Special procedures requiring WAIVER of standard criteria:

(a) Provide a copy of procedures subject to PRB review to AFS-410 prior to the PRB meeting.

(b) Facilitate the Division PRB.

(c) Coordinate with the appropriate RFSD to validate the assessed equivalent level of safety and/or participation on the Division PRB.

(d) Evaluate the scope and validity of the waiver request.

(e) Review the waiver request for adequate documentation.

(f) Evaluate waiver "Equivalent Level of Safety" to determine if alternatives to criteria meet or exceed the level of safety provided by standard criteria.

(g) Conduct detailed technical procedural evaluation, as required, using aircraft and/or flight simulator evaluation, risk modeling, and Airspace Simulation and Analysis for TERPS (ASAT).

(h) Assist AFS-410, as requested, in evaluating procedure packages where special training or aircraft equipment and/or performance requirements may exist, providing interpretation of design criteria as relates to waiver requirements.

(i) Enter "Special Authorization Required" in AFS-400 endorsement block on original Form 8260-1 (if required).

(j) Coordinate AFS-400 approval/ signature of the waiver package.

(k) Distribute the approved procedure as noted in paragraph 444.

(3) Special procedures requiring development of NEW CRITERIA.

` (a) Develop procedural design standards for criteria based on operational and equipment requirements.

(b) Draft criteria from standards provided from within AFS.

(c) Facilitate Division PRB evaluation and coordination of new criteria.

(d) Coordinate with the RFSD regarding implementation of new special procedure criteria to assess Air Traffic, Airway Facilities, or Airport issues.

(e) Process criteria for AFS-1 or AFS-400 signature, as appropriate, and distribute to

AVN-100 for use in design/redesign of proposed procedure.

(f) Facilitate Division PRB to evaluate the final procedure.

(g) Assist in evaluating the procedure packages where special training or aircraft equipment and/or performance requirements may exist.

(h) Enter "Special Authorization Required" in AFS-400 endorsement block on original Form 8260-1 (if required).

(i) Include a copy of new criteria in procedure package and copy of the AFS-400 approval to use.

(j) Coordinate AFS-400 approval/ signature of the procedure.

(k) Distribute the approved procedure as noted in paragraph 444.

442. Procedure Package Content.

a. Special instrument procedures may be developed by the proponent/operator (PO) or an agent hired by the PO. In addition to the completion of applicable FAA 8260-series forms, certain levels of coordination, maintenance, protection, and periodic review are required. The PO is responsible for providing to the RAPT the following actions and plans for the procedure:

(1) Obstruction Evaluation (OE) Study Plan. A plan in place to accommodate OE proposals. An assessment for aeronautical effect on the Special instrument procedure will be conducted and appropriate action taken as necessary.

NOTE: If public procedures exist at the same airport and an OE plan is in existence, a memorandum from the applicable FPO must accompany the package stating that the Special procedure will be included in the OE process.

(2) NOTAM Plan. Since the FDC NOTAM system is not used to disseminate NOTAMs on Special instrument procedures, a plan must be in place for notification of, and compliance with, safety of flight changes to procedure courses, fixes, altitudes, or minimums that are necessary.

(3) Periodic Review Plan. A plan in place for the periodic review and amendment process of the procedure as required by Order 8260.19, Flight Procedures and Airspace, chapter 2, section 8. The plan must identify who will be responsible for routine procedure maintenance, and completing/ documenting the periodic (biennial) review.

(4) Flight Inspection Plan. A plan is in place so that after the initial flight inspection of the procedure has been completed, periodic flight inspections are accomplished as specified in Order 8200.1, section 105.

(5) Environmental Plan. All environmental studies must be conducted and an appropriate checklist completed IAW Order 1050.1D.

(6) Air Traffic and Airspace. Appropriate documentation to indicate Air Traffic coordination and acceptance of the developed procedure and appropriate airspace requirements IAW Order 8260.19C, chapter 5, section 2.

(7) Airport/Heliport Acceptance. Appropriate documentation indicating airport/heliport management acceptance of the special instrument procedure.

(8) POI or FSDO. Name, office routing, and phone numbers of POI or appropriate FSDO inspector.

(9) User(s). Identify user(s) of the procedure, to include points of contact.

NOTE: If the proponent/operator later decides to authorize additional users, the POI and FSD-AWO/PM must be notified.

(10) Plans (1) through (5) may be omitted from submitted packages as agreed to and individually specified in a memorandum submitted to and approved by AFS-420.

NOTE: Memorandum submitted requesting permission to omit these plans must contain justification to do so.

b. Special procedures developed by AVN-100 must contain the following: applicable 8260-series forms, maps, and graphic depiction of the procedure.

c. A package without the required information listed above will be returned to the submitter without action.

443. CANCELLATION OF SPECIAL PROCEDURES.

a. The FSD-AWOP notifies AVN-100 (or commercial organization that is maintaining the procedure) that the procedure is no longer required and should be cancelled (see paragraph 4.4.1a(7).

b. AVN-100 (or commercial organization that is maintaining the procedure) prepares an original Form 8260-7 per paragraph 812, completing only the type of procedure and the City, State line, entering the required notation on the front of the form, leaving the "effective date" blank. The form is then sent to AFS-420 for processing and distribution.

c. AFS-420 processes the cancellation and forwards to AFS-400 for signature. Signed Form 8260-7 is returned to AFS-420 for distribution. The FSD-AWOP receives the original copy for filing at the region.

444. DISTRIBUTION. Responsible offices distribute forms as follows:

AFS-420	Original to:	File
	Copies to:	AVN-100 NFDC (ATA-110) Region FSD
Region FSD	Copies to:	FSDO/CMO for the proponent FSDO for the airport Non-Federal Developer (as appropriate) Airport Manager Region ATD FPO Other distribution (As required)
AWO or FSDO/CMO	Copy to:	Proponent(s) and other approved operators
Region ATD	Copy to:	ARTCC ATCT (as appropriate)
Proponent	Copy to:	Jeppesen, Inc./Other Cartographic Companies

445-449. RESERVED.

Figure 4-1. SPECIALS PROCESSING FLOW DIAGRAM

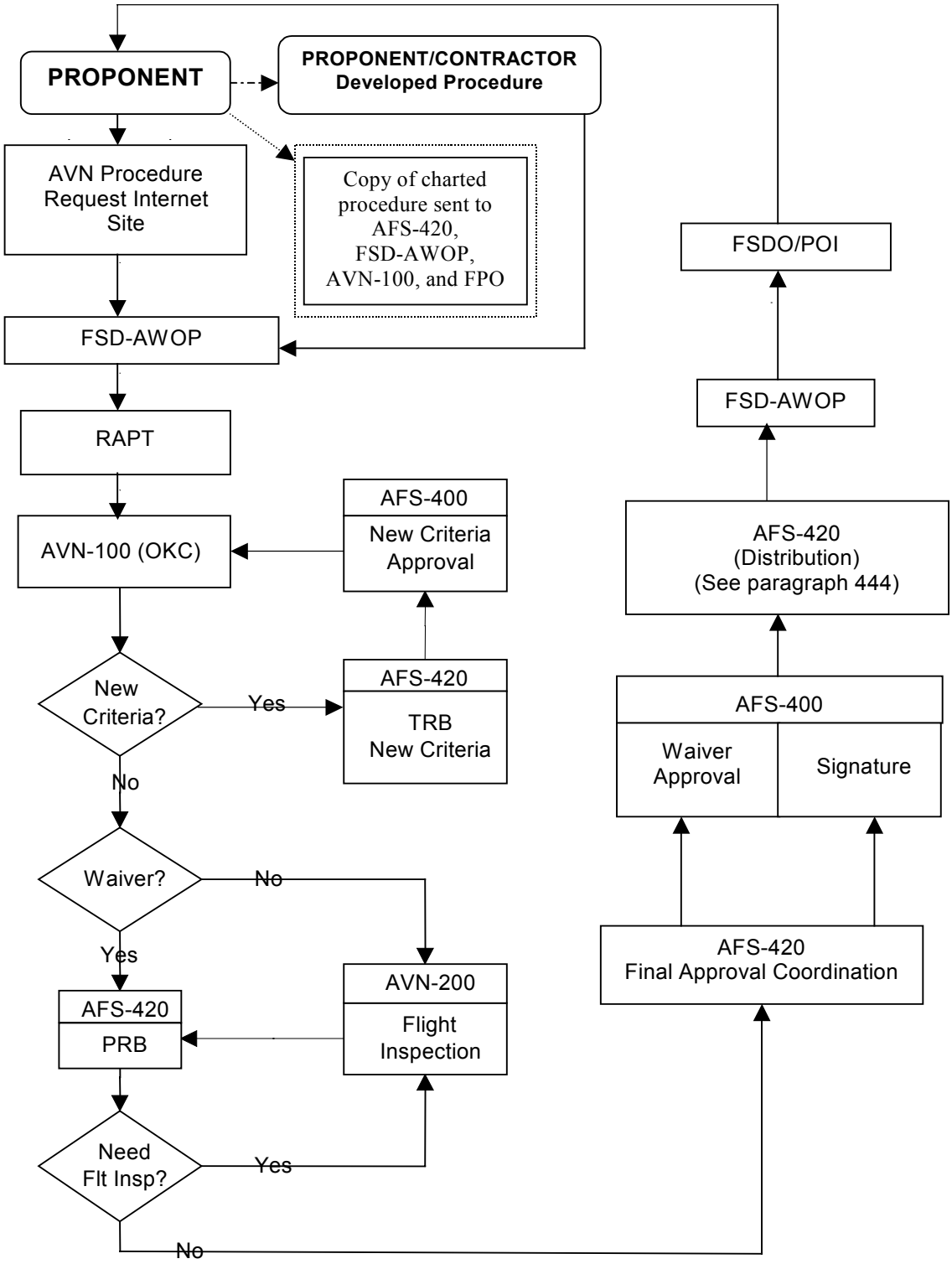

Figure 4-2. SPECIAL PROCEDURE CHECKLIST

Special Procedure Checklist

Location	ID/Region	Type of Procedure/Name
Type Aircraft expected to use procedure:		RFSD-AWO/PM

Special Procedure Information Required	
Why is this a Special?	(Example: Private airport; Nonstandard criteria; etc.)
Is there a similar Public Procedure?	(Example: No/Yes – {Name of procedure})
Is procedure use limited?	(Example: No/Yes – Limited to B-737 aircraft only; Limited to Part 121/135 Operations only; etc.)
Is the procedure developed using non-standard criteria?	(Example: No/Yes – {attach copy of criteria used})
Is a waiver and/or Flight Standards approval letter required?	(Example: No/Yes – FAA Form 8260-1/Flight Standards approval letter attached)
Obstruction Evaluation (OE) Study Plan *	(Example: "Attached" or "Conducted by AVN-100")
NOTAM Plan *	(Action: Attach method to be used for notifying user)
Periodic Review Plan *	(Example: "Attached" or "Conducted by AVN-100")
Flig+ht Inspection Plan*	(Example: "Attached" or "Conducted by AVN-200")
Environmental Assessment*	(Example: "Attached" or "Conducted by AVN-100")
ATC and Airspace Coordination Completed*	(Action: Attach coordination documentation.)
Airport/Heliport Management Coordination Complete*	(Action: Attach coordination documentation.)
POI or FSDO Name and Contact Information*	(Example: {Name}, {Office symbol}, {Phone/e-mail contact})
Proponent/User(s)*	(Example: {Name}, {Address}, {Phone/e-mail contact})

*Items required as specified in Order 8260.19C, paragraph 442.

Comments

SECTION 5. DIRECTION FINDING (DF) PROCEDURES

450. GENERAL.

DF facilities have been established at air traffic facilities. Many of these have the capability to provide emergency approach procedure support where the DF antenna is suitably located with respect to an airport. This section describes a modified procedure to provide maximum stability in the approach by using small degrees of turns and descents.

451. FORMAT.

The DF approach procedure must be documented and approved on Form 8260-10, Standard Instrument Approach Procedure, and restrictively identified for emergency use only. Include a diagram showing the planview of the procedure, including magnetic courses and minimum flight altitudes. Provide minimum safe altitudes to 100 miles from the DF antenna. Name the appropriate ATC facility on Form 8260-10 to identify the source of DF control.

452. APPLICATION OF CRITERIA.

Formulate the basic DF approach procedure in accordance with TERPS Volume 1, chapter 8. Modify the approach pattern in accordance with the following guidelines:

a. Initial Approach Segment. The initial approach for on-airport facilities includes all portions of the approach between the station passage and the final approach course. Approach procedures for DF facilities located off the airport must have an intermediate segment, in accordance with TERPS Volume 1, paragraph 812. The following is a description of the modified low altitude triangular pattern:

(1) A 30° angle of divergence exists between the outbound course and the reciprocal of the inbound course.

(2) The outbound leg is established as a 3-minute leg.

(3) The base leg is formed by a 120° turn to position the aircraft 90° to the final approach course.

(4) Two 45° turns are provided to place the aircraft on final approach. These turns are depicted on the diagram and executed at the discretion of the DF operator.

b. Minimum Altitudes. Show minimum altitudes for each approach segment except for the portion between the 45° turns. Establish the minimum altitude for the final approach segment in accordance with TERPS Volume 1, paragraph 321. Since these are emergency procedures, do NOT establish ceiling and visibility minimums.

c. Identification of Procedures. Normally, develop only one approach procedure for each DF location. More than one procedure may be developed when procedures for low and high performance aircraft are not compatible. Identify procedures in accordance with TERPS Volume 1, paragraph 161.

453. DF VECTORING ALTITUDES.

Where a DF approach procedure is not authorized, DF vectoring altitudes may be developed for use by the controlling facility. Altitudes must be entered on Form 8260-10 and must be identified as DF vectoring altitudes. Required obstacle clearance is 1,000′. Round altitudes to the next higher 100′ increment. Minimum accuracy standards for controlling obstacles are stated in paragraph 271b.

454. DF VECTOR AREA.

a. Criteria. Construct the DF Vector area in accordance with paragraph 451, and TERPS Volume 1, chapter 8.

b. Sector Radii.

(1) Outer sector radius is 100 NM.

(2) Middle sector radius is 40 NM (Doppler) or 30 NM (VHF/DF).

(3) Other distances may be used to sectorize around obstructions and otherwise, if operationally justified.

(4) Use a 20 NM sector radius for a low altitude SIAP, and the 30/40 NM radius for high altitude penetrations.

(5) Radii less than 10 NM should be used with caution due to the requirement for adjacent sector obstacle coverage stated in TERPS Volume 1, paragraph 810.

c. Sector reduction. Use a minimum number of sectors by combining sectors where possible.

NOTE: Remember that DF is for emergency use; and ATC is attempting to get the aircraft into radar coverage or a clear area where the aircraft can let down VFR.

d. Minimum safe or sector altitudes may be increased and combined with adjacent higher sectors when a height difference does not exceed 500′- UNLESS an operational requirement exists for lower altitudes (e.g., initial approach altitude for DF SIAP).

455. DISTRIBUTION.

AVN-100 must prepare and approve the Form 8260 10, assign the effective date, and distribute as described in chapter 8, Table 8-1.

456. CANCELLATION OF DF PROCEDURES.

When the DF procedure or DF vectoring area is no longer required, AVN-100 must take action to cancel the procedure. Continued need must be determined during the biennial review.

457-459. RESERVED.

SECTION 6. CATEGORY II AND III ILS

460. GENERAL.

a. Guidance. The following directives (latest editions) contain criteria/guidance to be us ed in the development or amendment of ILS Category II and III procedures:

(1) Order 8260.3, U.S. Standard for Terminal Instrument Procedures (TERPS), Volume 3.

(2) AC 120-28, Criteria for Approval of Category III Landing Weather Minima for Takeoff, Landing, and Rollout.

(3) AC 120-29, Criteria for Approval of Category I and Category II Weather Minima for Approach.

(4) Order 8200.1, United States Standard Flight Inspection Manual, section 217.

(5) Order 6750.24, Instrument Landing System and Ancillary Electronic Component Configuration and Performance Requirements.

(6) Order 8400.8, Procedures for Approval of Facilities for FAR Part 121 and Part 135 CAT III Operations.

(7) Order 8400.13, Procedures for the Approval of Special Authorization Category II and Lowest Standard Category I Operations.

b. Advise the general public of airports authorized Category I, II, and III minimums by publishing the appropriate 14 CFR Part 97 SIAP. Category IIIc minimums must be included in the minimums format of the IAP (see paragraph 813k).

c. The minimum class of performance (see Order 6750.24) required for an ILS to support a published ILS Category II or III SIAP is as follows:

(1) Class II/T/2 for Category II operations.

(2) Class III/D/3 for Category III operations not less than RVR 700**.**

(3) Class III/E/3 for Category III operations not less than RVR 600.

(4) Class III/E/4 for Category III operations less than RVR 600.

d. A detailed explanation of the characters used to identify a facility's class of performance is contained in Order 6750.24, appendix 2. The first character (I, II, or III), ILS International Civil Aviation Organization (ICAO) standards, is determined jointly by flight inspection and engineering personnel. The second character (A, B, T, D, or E), localizer course structure, is determined solely by flight inspection personnel. The third character (1, 2, 3, or 4), ILS integrity and continuity, is determined solely by engineering personnel.

e. Irregularities in pre-threshold terrain or HGS/autoland system/radar altimeter characteristics might adversely affect radar altimeter indications and thus affect autoland performance of some aircraft (see paragraph 462). Until or unless these aircraft demonstrate normal radar altimeter readings and acceptable HGS/autoland operations on that runway, and this fact is listed in their operations specifications, they cannot conduct Category III HGS/autoland operations. AFS-410 acts as the clearing house for listing which combinations of HGS/autoland systems/runways are or can be approved, and is positioned for receipt of information from Flight Inspection, AAF, ATC, Airports, and airport authorities regarding irregular underlying terrain situations at new runways or runways at which future Category III procedures are proposed.

461. ACTION.

a. Regions.

(1) Regional Airway Facilities Division, and AVN-100 coordination is essential. AVN-100, having planned Category II and III ILS runways in its area of responsibility, must assure the system meets the necessary ground system and obstacle clearance requirements (see Order 8400.8).

NOTE: The requirements for the marking of ILS glide slope (GS) and localizer (LOC) obstacle free zones, and procedures for ensuring obstacle clearance with respect to aircraft on the ground, are contained in AC 150/5300-13, Airport Design.

(2) Regional Flight Standards Division, All Weather Operations Program Manager (AWO/PM) coordinates the procedure request with the Regional Airspace and Procedures Team (RAPT). The AWO/PM is also responsible for coordinating the CAT II/III checklists and will notify AFS-410 when Category II or III checklists are complete. Notification must contain the information obtained from AVN-100 (see paragraph 461b(1).

b. AVN-100.

(1) AVN-100 must advise the regional Flight Standards Division (FSD) when a Category II or III system has passed flight inspection. Notification must contain the following information:

(a) Airport.

(b) Runway.

(c) Flight inspection completion date.

(d) Facility classification.

(e) Minimums:

Category II DA and RA.
Category III a/b/c RVR (as appropriate).

(f) Date approach procedure will be available.

(g) Status of SMGCS Plan (from regional AWO).

(2) Amend ILS SIAPs when Category II, IIIa, IIIb, and IIIc minimums are authorized. Where only Category II and IIIa are authorized, indicate Category IIIb and IIIc as not authorized (NA) (see paragraph 813k).

c. The Flight Inspection Technical Support Branch, AVN-210, must maintain the current ILS performance classifications in the Aviation Standards Information System (ASIS) database. The regional Airway Facilities Division must notify the Flight Standards Division and AVN-210 of individual ILS facility performance classification determinations, and any change in the performance class of a facility, so that changes in Category III authorizations can be made.

d. AFS-410 CAT II/III Status List Website. This notification will provide operators with the planned availability of the new minimums for preparation of operations specifications prior to publication of the SIAP.

462. RADIO ALTIMETER HEIGHTS.

The methodology used in computing radio altimeter setting is contained in Order 8260.23, Calculation of Radio Altimeter Height. Establish radio altimeter heights by utilizing the as-built approach light system (ALS) vertical profile drawings or drawings of equal accuracy. Use terrain elevations on the runway centerline extended to compute radio altimeter heights (see paragraph 461b(2)).

463. NOTAM REQUIREMENTS.

When any component of the ILS system fails to meet the appropriate performance tolerances, Airways Facilities issues a NOTAM (D) for suspension of Category II/III minimums. If the suspension will exist longer than 224 days or will be permanent, AVN-100 must submit an abbreviated or full amendment (see also paragraph 224d(4).

464. WAIVER REQUIREMENTS.

When required, AVN-100 must prepare a waiver request on Form 8260-1, in accordance with chapter 2, section 12, of this order.

465-469 RESERVED

SECTION 7. DEPARTURE PROCEDURES (DP)

470. GENERAL.

Use Order 8260.46, Departure Procedure (DP) Program, for guidance and standardization for initiating, processing, developing, and managing the DP program.

471-479. RESERVED.

SECTION 8. STANDARD TERMINAL ARRIVAL (STAR)

480. INTRODUCTION.

a. Air Route Traffic Control Centers (ARTCC) submit STARs to AVN-100 through the regional ATD for review. ARTCCs are responsible for issuance of NOTAMs for STARs (see paragraph 2.2.4c).

b. AVN-100's review must ensure obstacle clearance requirements; accuracy of courses, distances, and coordinates; clarity and practicality of the procedures; and assurance of navigational guidance adequacy. AVN-100 must coordinate any discrepancies, required adjustments, or improvements noted during the review process and/or flight inspection with the sponsoring air traffic facility.

481. AVN-100 ACTION.

a. STARs.

(1) Ensure that the STAR commences at a charted high or low altitude en route fix.

(2) Verify, **in conjunction with flight inspection**, that minimum en route altitudes provide required minimum obstruction clearance altitudes (MOCA) and meet minimum reception altitudes (MRA), communication, and airspace requirements.

(3) Verify obstacle clearance requirements are met for lost communications instructions provided by the ARTCC. If the ARTCC did not provide lost communications instructions, and it is determined that obstacles/terrain present a potential problem, **coordinate** with the ARTCC for resolution of the matter.

(4) Incorporate, **where possible, the STAR** termination fix into the SIAP as a feeder/initial approach fix.

(5) Verify entry into maximum authorized altitude (MAA) from available documentation; e.g., flight inspection reports, expanded service volume (ESV) reports, etc.

b. General.

(1) Review from the pilot's standpoint. The procedure must be flyable and should be as simple as possible. Use clear, concise, and standard phraseology. Request flight inspection assistance.

(2) Ensure, in conjunction with flight inspection, that facility performance will support the procedure. This may require preparation of materials such as maps and ESVs to support facility flight inspection.

(3) Verify the accuracy of courses, distances, and coordinates.

(4) Return the signed form to the regional ATD for further processing.

(5) Retain a copy of each approved form with charts, computations, and supporting data to facilitate future reviews.

(6) Include normal distribution copies of Form 8260-2 for ATA-100 and ARTCC in the package forwarded to the regional ATD.

482-489. RESERVED.

SECTION 9. RNAV PROCEDURE DEVELOPMENT

490. GENERAL.

This section contains supplementary guidance for the development of RNAV instrument procedures. RTCA DO-201A, Standards for Aeronautical Information, has established operational requirements and standards that aviation authorities, procedure designers, and airspace planners must consider when developing en route, arrival, approach, departure, and aerodrome environments. This guidance provides a standardized method of processing RNAV instrument procedures using information from this RTCA document.

491. RNAV APPROACH PROCEDURE DESIGN. Criteria for the development of RNAV instrument procedures can be found in Order 8260.3 and other related 8260-series orders.

a. All RNAV instrument approach procedures must be connected to the en route airway system in order to provide a seamless transition into the Terminal Area. Accomplish this by one of the following methods:

NOTE: This policy is recommended but not required for helicopter procedures.

(1) Establish a feeder route from the en route airway to all IAFs not on an airway.

(2) Extend the "T" leg initial segment to place the IAF on an en route airway. Do not extend the "T" leg more than 10 miles from the Intermediate Fix.

(3) Use a modified form of the basic "T" (L or I) or a route type approach.

(4) Establish a Terminal Arrival Area (TAA) as prescribed in Order 8260.45, Terminal Arrival Area (TAA) Design criteria.

b. The RNAV procedure should, whenever and wherever possible, match the ILS at the same runway in the following respects: final and intermediate segment procedure ground track, missed approach, altitudes, fix locations/names, glidepath angles, and threshold crossing heights (TCH). Nothing in this policy requires an RNAV procedure to emulate a procedure turn used on an underlying ILS procedure. Due to the many variables involved in procedure design, especially relating to the very different aspects of ILS and RNAV design, it is impractical to set standards for all possible ILS/RNAV designs; therefore, in lieu of hard and fast design standards, use the following design guidelines:

(1) When designing an RNAV procedure at an ILS equipped runway, the ILS becomes the design standard unless the ILS IAP needs substantial updates or has a nonstandard glide slope angle or TCH. If the ILS needs updating, it is advisable to publish updated ILS and RNAV procedures concurrently. In emulating an ILS, do not include either a basic “T” or TAA in the RNAV IAP unless specifically requested by Air Traffic.

(2) If the ILS PFAF occurs at the LOC FAF, emulation of the ILS by the RNAV procedure may be a simple matter. In this case, the RNAV PFAF can be placed at the LOC FAF location and thus coincidence will have been achieved for the ILS PFAF, LOC FAF and RNAV PFAF. Use the LOC FAF name for the RNAV FAF name. Revising the ILS procedure will, in all likelihood, not be necessary.

(3) For a variety of reasons, the situation described in paragraph 491b(2) is seldom found in practice. Where the ILS PFAF is not collocated with the existing LOC FAF, the associated LOC portion of the ILS procedure may have to be revised at the same time the new RNAV IAP is developed.

(a) If the present LOC FAF is defined by DME, intersection or radar, revise the ILS procedure by relocating the LOC FAF to coincide with the RNAV PFAF which can be placed at the vertical descent angle interception point for the given ILS glide slope angle/TCH and LOC FAF altitude. Use the LOC FAF name for the RNAV FAF name.

(b) If the present LOC FAF is defined by a facility such as an OM or LOM and localizer DME is available, define the LOC FAF using DME and collocate the LOC FAF and RNAV PFAF as in the option of paragraph 491b(3)(a). If possible, retain the present facility name for use at the LOC/RNAV FAF.

c. Establish an LNAV FAF for all new RNAV procedures at a location that will support a collocated PFAF for future LNAV/VNAV and/or WAAS/LAAS procedures.

492. DEVELOPING RNAV WAYPOINT.

a. In establishing the position of a waypoint fix, determine which category of fix will best meet the airspace, route of flight, obstacle clearance, and operational requirements. Fly-By and Fly-Over fixes are the two basic types of waypoint fixes that are used in transitioning from one route segment to another when conducting instrument approach, en route arrival, or departure procedures.

(1) Fly-By (FB) waypoint fixes identify a position where a change in course occurs from one specified route segment to another. Turn anticipation is required and expected as the aircraft executes the turn maneuver. The FB waypoint fix is the most desired and useful type for use in RNAV procedure design due to the conservation of airspace. Unless otherwise required by the procedure design, all waypoint fixes defining a course change must be coded in the navigation database as FB.

(2) Fly-Over (FO) waypoint fixes may or may not identify a change in course from one specified route segment to another. Turn anticipation is not permitted. FO fixes require substantially more airspace to protect for the turn than FB fixes, and should be used only where special design problems necessitate. Missed approach points and missed approach holding points must be designated as FO.

b. FAA 8260-series forms must document fix type and waypoint description code for all waypoint fixes used in RNAV procedure design. Because of the different obstacle assessments conducted, FO or FB information is critical to flight crews and should be consistently displayed on aeronautical charts and in navigational databases. The waypoint type (FO/FB) description codes are documented on Form 8260-3/5/7 as applicable (see paragraph 851a(7)).

c. En Route. Do NOT establish RNAV WPs at NAS en route facilities. Do NOT establish RNAV WPs at en route fixes when used as feeder fixes for RNAV procedures.

d. Terminal. Develop terminal use RNAV WPs based on usage as follows:

(1) Missed Approach Point (MAP). Normally the MAP is at the threshold but may be located prior to the threshold, on or off runway centerline.

(a) MAP located at Threshold**.** The landing threshold is contained in the runway file in the RNAV database, and identified by ARINC code for the threshold. Do NOT document a MAP located at the landing threshold on an 8260-2.

(b) MAP not located at Threshold. The landing threshold will be the reference point. True bearing is from reference point to MAP. If the MAP is on runway centerline extended, use the reciprocal of the landing runway true bearing. Distance is from reference point to MAP.

(2) Final Approach Fix (FAF). Establish the location of the FAF as a true bearing and distance as follows:

(a) Final approach course aligned through threshold. Use landing threshold as reference point.

(b) Final approach course not aligned through threshold. Use MAP as reference point.

(3) Intermediate Fix (IF). Establish the location of the IF as a true bearing and distance as follows:

(a) No course change at FAF. Utilize the same reference point used to establish the FAF.

(b) Course change at the FAF. Use the FAF as the reference point.

(4) Initial Approach Fix (IAF). Establish the location of the IAF as a true bearing and distance as follows:

(a) No course change at the IF or FAF: Utilize the same reference point used to establish the FAF.

(b) No course change at the IF, with a course change at the FAF. Use the FAF as the reference point.

(c) Course change at the IF. Use the IF as the reference point.

(5) Feeder Fix. If a WP is required for use as a feeder fix, and will NOT be an en route fix, establish the location of the feeder fix as a true bearing and distance as follows:

(a) No course change at the IAF. Apply the same reference point used to establish the IAF.

(b) Course change at the IAF. Use the IAF as the reference point.

(6) Missed Approach. For all WPs in the missed approach, after the MAP, use the preceding WP as the reference point.

493. RNAV LEG TYPES.

a. Different types of arrival, approach, departure, and en route segments are required for RNAV. Consideration of these requirements during procedure design will result in a more efficiently designed flight path for all operators using airspace; particularly those equipped with computer-based navigation systems. These systems require encoding RNAV route segment flight paths into a format usable in navigation databases.

b. The aviation industry has adopted a route segment definition called "path and terminator." This concept is used for transforming arrival, approach, and departure procedures into coded flight paths that can be interpreted and used by a computer based navigation system. A path terminator instructs the aircraft to navigate from a starting point along a defined path to a specified point or terminating condition. The path terminators are identified by a set of two alpha-characters, each of which has a meaning when describing a flight maneuver to a navigation computer. The first character indicates the types of flight path to be flown, and the second indicates where the route segment terminates. For example, a designated route from a NAVAID to a fix would be coded as "TF." The "T" indicates that a track is to be flown, and the "F" indicates that the segment terminates at a fix. There are over twenty different path and terminator sets ("leg types") used by the aviation industry to accommodate the coding of procedure route segments. However, only a limited few are suitable for use in RNAV procedure design.

c. Document leg type codes on 8260-series forms in accordance with applicable instructions in chapter 8 and Order 8260.46, Departure Procedure (DP) Program.

494. RNAV LEG TYPE DESCRIPTIONS.

a. Initial Fix (IF). This is the point or fix where a flight segment begins. An IF is not a route segment and does not define a desired track in and of itself. It is used in conjunction with other leg types such as a TF leg in order to define the desired segment.

NOTE: "IF" in this context is not to be confused with Initial Approach Fix (IAF) or Intermediate Fix (IF), however, it may be located at one of these locations for coding purposes.

b. Track-to-Fix (TF) Leg. This designates a track or geodesic path between two fixes. If the TF leg is the first route segment of a flight path, the TF leg begins at an initial fix (IF); otherwise, the first fix of the TF leg is the termination fix of the previous route segment. The TF leg is the primary straight route segment for RNAV.

c. Constant Radius to a Fix (RF) Leg. An RF leg defines a curved path route segment about a defined turn center that terminates at a fix. The RF leg begins at the termination fix of the previous route segment. The previous segment is tangent to the arc of the RF leg at that fix. An RF leg is the primary curved path route segment for RNAV.

d. Course-to-Altitude (CA) Leg. The CA leg is used to code the initial leg at the beginning of the missed approach segment. This leg type requires a stated course and altitude at the beginning of the missed approach. This altitude will be the lowest DA/MDA associated with the procedure. A DF leg must always follow a CA leg.

e. Direct-to-Fix (DF) Leg. A DF leg is used to define a route segment (geodesic path) that begins at an aircraft present position, or unspecified position, and extends to a specified fix.

f. Heading-to-an-Altitude (VA) Leg. The VA leg is used in a departure route segment where a heading rather than a track has been specified for climb. The VA segment terminates at a specified altitude without a terminating position defined.

g. Course-to-Fix (CF) Leg. The CF leg is defined as a magnetic course that terminates at a fix. Although the CF leg is used in many traditional approach and departure procedures, this leg type is to be avoided in the design of RNAV procedures.

h. Vector-to-Fix (VM) Leg. A VM leg is used for whenever a departure route description specifies a course to fly in expectation of a Radar Vector.

495. FINAL APPROACH SEGMENT (FAS) DATA.

a. FAS data is described and attained using established TERPS criteria in Order 8260.3, Volume 3. This data is compiled and formed into what is called the FAS Data Block. The method of protection required of this flight data is known as the Cyclic Redundancy Check (CRC).

b. Document FAS Data Block information on Form 8260-10 (future documentation and transmittal of this information will be via electronic means). Guidance on producing data that is required to be placed on this form is located in appendix 11.

496. REMOTE ALTIMETER SETTING FOR BARO-VNAV.

Baro-VNAV systems cannot fly to approach minimums based on a remote altimeter setting. See paragraph 855e(8) for appropriate notes to be placed on the procedure.

497. CRITICAL COLD TEMPERATURE.

This temperature is provided on the RNAV instrument procedure in terms of deviation from International Standard Atmosphere (ISA) and is the temperature below which Baro-VNAV operations are not authorized at that location. ISA temperatures vary with airport elevation. TERPS criteria provide the formulas to compute the critical temperature for the airport of intended landing from the ISA deviation used for the procedure development. The critical temperature for an airport in Hawaii is ISA -20°C; for contiguous U.S. is ISA -30°C; and for Alaska is ISA -40°C. Use: **"Chart Note: Baro-VNAV NA below ____°C (____°F)."** Document the "Critical Temp" computations, if other than standard, in the remarks section of the Form 8260-9.

498. DME/DME SCREENING MODEL.

Apply the RNAV-Pro DME screening model to ensure satisfactory availability and geometry of DME navigation signals for RNAV instrument procedures and RNAV "Q" routes intended for use by FMS equipped aircraft that are DME/DME capable. Flight inspection will record the coverage and accuracy of the facilities identified by the screening model; whether or not the data obtained is satisfactory to support the procedure will be determined by further analysis with the screening model. When a proposed RNAV "Q" route is being evaluated and a critical DME facility is identified by RNAV-Pro or flight inspection, an RNAV "Q" route cannot be established.

499. ADDITIONAL DOCUMENTATION WITH BARO-VNAV AND/OR WIDE AREA AUGMENTATION SYSTEM (WAAS) INSTRUMENT APPROACH PROCEDURES.

a. Enter 5-digit WAAS Channel number; e.g., WAAS Channel Number 21345. The WAAS channel number will be obtained from the National Flight Data Center (NFDC) and entered into the Additional Flight Data block.

b. Enter Approach ID; e.g., **W09A.** This is the same as the Reference Path Identifier described in appendix 11 and is part of the FAS Data Block. Additionally, enter this information in the Additional Flight Data block of the 8260-series form so that it can be published below the WAAS channel number.

c. Enter "Critical Cold Temp" data (see paragraph 497); e.g., **Critical Temp: XX°C (XX°F)**.

d. Due to limited WAAS coverage at certain locations, a restriction may be required on procedures where WAAS can be used for vertical navigation on a procedure containing LNAV/VNAV minima. This restriction is portrayed on the instrument procedure chart with a negative-type "W" icon that signifies WAAS signal outages may occur daily and that these outages will not be NOTAM'd. At locations where LNAV/VNAV minima are published and it has been determined that there is no WAAS coverage whatsoever, a note will be placed on the approach plate that reads: "**WAAS VNAV NA."**

e. Where DME/DME RNP-0.3 is not authorized, use **"Chart Note: DME/DME RNP-0.3 NA**." Where DME/DME RNP-0.3 is authorized, use **"Chart note: DME/DME RNP-0.3 Authorized."** Where DME/DME RNP-0.3 is authorized only when required facilities are necessary for proper navigation solution, use: **"Chart note: DME/DME RNP-0.3 Authorized; ABC and XYZ must be Operational**."

f. Document the Approach Route Type Description and Qualifier Description in the Additional Flight Data block. These descriptions are in the form of an alpha character and found in ARINC Standard 424, Navigation Database, paragraph 5.7.

g. Enter Terminal Arrival Area (TAA) data as directed by Order 8260.45. Determine if the use of "(NoPT)" is appropriate and document accordingly.

h. Document the Waypoint Description Code as defined in ARINC Standard 424 on the applicable Form 8260 used (see paragraph 851a(7)). This information will be entered in four separate columns as part of the procedure Path Point Record (see Appendix 12).

i. On a separate Form 8260-10 designed for this purpose, enter the FAS Data Block (precision path point) information (see paragraph 494 and appendix 11).

CHAPTER 5. AIRSPACE

SECTION 1. OBSTRUCTION EVALUATION (OE).

500. GENERAL.

14 CFR Part 77 requires that the Administrator be notified prior to the construction or alteration of structures which might present a hazard to flight. Form 7460-1, Notice of Proposed Construction or Alteration, is the medium for that notification of construction or alteration.

501. RESPONSIBILITY AND PROCESSING OF FAA FORM 7460-1.

The Regional ATD has the responsibility to process all Forms 7460-1 in accordance with 14 CFR Part 77 and Order 7400.2, Procedures for Handling Airspace Matters. In this regard, AVN-100 shall ensure that a complete evaluation of the effect the proposed construction or alteration will have on IFR aircraft operations, including the visual portion of an IFR procedure, is provided to Air Traffic. AVN-100 must also assist Air Traffic in reconciling possible discrepancies in IFR findings made by military services. Additionally, the Regional Flight Standards Division, All Weather Operations Program Manager, must serve as the focal point for assessing VFR operational impact. Initial impact assessments should be made by the FPO and FSD. Headquarters-level case reviews must be accomplished by AVN-100 (IFR) and AFS-420 (VFR).

502. REVIEW OF NOTICES.

AVN-100 and Flight Standards personnel normally involved in the evaluation of Notices of Construction or Alteration should be thoroughly familiar with applicable parts of Order 7400.2. The effect of a proposed structure on aircraft operations should be fully stated. Consultation with the appropriate FSDO and/or AVN-200 may be helpful in formulating recommendations. The following should be considered:

a. Effect on VFR Traffic. The FSD AWO/PM evaluates those proposals circulated for public comment and those cases identified by the runway departure obstacle screening (RDOS) program. For circularized proposals, the effect upon VFR routes, airports/terminal operations, or other concentrations of VFR traffic. Air Traffic is responsible, under Order 7400.2, for assessing VFR traffic pattern impact; Flight Standards provides assistance in this area as requested.

b. Departure Obstacle Assessments. The RDOS program identifies potential impacts on aircraft safety for a straight out departure path to 20,000 feet at the International Civil Aviation Organization (ICAO) recommended lateral departure protection for "IFR and VMC by night." As specified in Order 7400.2, obstacles, either temporary or permanent, identified by RDOS, should be subject to supplemental notice and/or NOTAM if constructed in order to provide operators with complete obstacle data. Proposed structures that penetrate the RDOS screening surface and if not clearly shielded by existing obstacles will be evaluated either manually or using RNAV PRO. For this evaluation, RNAV PRO is programmed to evaluate the minimum flight path width specified under Sections 121.189 and 135.379 at a 62.5:1. The minimum flight path slope of 62.5:1 is the equivalent of the Part 25 two-engine aircraft second segment climb protection for large turbine powered aircraft (see Order 8400.10, Air Transportation Operations Inspector's Handbook, paragraphs 947 through 1027). The 62.5:1 slope should be protected unless a higher slope is created by existing obstacles. Both the RDOS screening program and RNAV PRO are only intended to provide an evaluation until the minimum performing aircraft reaches an elevation 400 feet above the departure end of the runway. While obstacles beyond the nominal distance of 20,000 feet from the runway end may create adverse impact, individual air carriers can assess obstacles differently once an aircraft has reached the minimum turn altitude of 400 feet. More detailed engineering analysis of a proposed structure by air carrier performance personnel may yield more specific air carrier impacts. Verification of individual effects may be difficult to quantify due to use of de-rated thrust, variable takeoff safety speeds, etc. The FSD evaluation above is only intended to verify the probable effect of close-in obstacles on departing aircraft and provides the ATD with information relative to the possible loss of useable runway (see Order 7400.2, chapter 6).

c. Terminal Area IFR Operations. AVN-100 must assess the effect upon terminal area IFR operations to include approach/departure procedures, transitions, radar vectoring charts, holding patterns, and STARs. The study must assess the effect upon any segment of an existing or proposed instrument approach/departure procedure and any restrictions.

d. En Route IFR Operations. AVN-100 must assess the effect upon en route IFR operations to include MEAs, MOCAs, MCAs, MHAs, MIA charts, and turning areas.

e. Accuracy. All studies must be made assuming the obstruction will be built or modified to the height specified in the study. If the proposed obstruction qualifies as the controlling obstacle for an IFR procedure, re-evaluate the proposed structure for impact using a 4D accuracy code. This impact must be forwarded to Air Traffic as the IFR impact. However, AVN-100 must also provide the survey accuracy required to mitigate the impact; i.e., "a surveyed accuracy of 'xx' horizontally and 'xx' vertically will result in either reduced or no IFR impact." (See chapter 2, section 11.)

f. NAVAID Interference. When informed by Air Traffic that it has been determined by Airway Facilities and/or frequency management personnel, that there may be interference with facility performance, AVN-100 determines the effect upon any instrument flight procedure. This includes radio or NAVAID interference through inter-modulation, overload, spurious or harmonic conditions which affect the receiver performance. Provide protection for all IFR areas and altitudes.

g. Adjustments to Instrument Flight Procedures. During negotiations with proponents or when requested by Air Traffic, AVN, or AFS, specialists should provide what procedure adjustments can be made to mitigate the effect without adversely affecting the procedure. AVN-100 must not amend a procedure until receipt of the "Actual Notice of Construction," or other notification relative to an obstacle which will have a procedural effect. If, during a procedural review or while on a site visit, it becomes obvious for safety reasons that the existence of a previously unknown obstacle requires procedure minimums to be increased, expedite accomplishment of the change by means of a NOTAM.

h. Statement of Adverse Impact. If the proposed construction or alteration will have an adverse effect on VFR or IFR aircraft operations, procedures, useable runway length, or minimum IFR flight altitudes, AVN-100 and Flight Standards evaluations should clearly state the extent of these effects. Air Traffic is responsible for making the final determination of whether adverse impacts are "substantial" or "minimal."

i. AC 70/7460-1 Obstruction Marking and Lighting. AVN-100 and Flight Standards personnel should be familiar with this advisory circular so that appropriate remarks can be made regarding the requirements therein. This is especially important where exceptions from marking and lighting standards have been requested by the applicant.

503. OBSTRUCTIONS UNDER SUBPART C, 14 CFR PART 77.

Construction or alterations identified as obstructions based on the standards of Subpart C, although not automatically hazards to air navigation, are presumed to be hazards to air navigation until an FAA study has determined otherwise.

SECTION 2. DESIGNATION OF CONTROLLED AIRSPACE

504. GENERAL.

a. To afford separation from other aircraft all instrument flight procedures must be contained in controlled airspace to the maximum extent possible within the capabilities of the ATC system. DF procedures are exempt from this policy. For special procedures, refer to paragraph 402c.

b. Order 7400.2 clarifies that a 300-foot buffer should be taken into consideration when computing airspace requirements for IFR procedures. Therefore, a 300′ buffer has been included in the references to the 1,000′ and 1,500′ points in paragraph 507.

505. AT RESPONSIBILITY.

It is the responsibility of the regional ATD to determine the type and amount of controlled airspace that can be established to encompass instrument flight procedures, including departures from the airport.

506. AVN-100 ACTION.

a. Determine airspace requirements for all original IAPs. Analyze IAP amendments which affect any fix, course, or altitude to determine if existing airspace must be extended or can be reduced. Similarly, analyze IAP cancellations to determine if existing airspace can be reduced. AVN-100 must coordinate with the ATC to determine if further procedure development needs to be delayed pending any airspace action.

b. AVN-100 analysis, in accordance with the provisions of this section, must include, in part, a determination of the minimum required length and width of the Class B/C/D/E Surface Area extensions, and/or any Class E 700' airspace extension.

c. Document data, as described in paragraph 507k, on the Form 8260-9, Standard Instrument Approach Procedure Data Record, supports the IAP being designed. (See paragraph 860c "Remarks" for forms completion guidance.) Forward this data to the appropriate regional AT office.

*NOTE: This information may also be entered on any form considered acceptable by AVN-100 and the ATD; however, to avoid loss of data it is strongly recommended that AVN m*ake the entry in Form *8260-9, REMARKS, for permanent record. The statement must reflect either "No additional airspace required" or "See attached airspace letter."*

507. TERMINAL AIRSPACE.

The following criteria must be used to determine the required minimum length and width of Class B/C/D/E Surface Area and/or Class E 700′ airspace extensions.

a. The requirement to designate controlled airspace is contained in Order 7400.2, Part 4.

b. The nearest 100′ principle must be applied in determining the height of the controlling terrain. Example: A terrain elevation of 249.99′ MSL would be considered as 200′; 250.00′ MSL as 300′.

NOTE: Use of the following computation methods MUST consider the primary area of all applicable segments of any IAP under analysis. Any arrival extensions must be the result of "worst-case scenario" analyses, reflecting the greatest amount of controlled airspace required.

c. Class B/C/D/E Surface Area Extensions. Establish an extension of the Class B/C/D/E Surface Area whenever an IAP authorizes descent to an altitude less than 1,000′ above the surface at a point outside the basic surface area. Where multiple approach procedures are established utilizing the same approach course, the extension length and/or width must be based on the approach, or approach combinations, requiring the greatest length and/or width respectively.

(1) Procedures with vertical guidance. Where ILS, MLS, WAAS (LPV), LAAS, LNAV/VNAV, etc. procedures are involved, the 1,000′ point is established as follows:

(a) Determine the elevation of the highest terrain in the final approach (primary area, or the "W" and "X" surfaces, as appropriate).

(**b) Add 1,000 feet to this figure**, and subtract the MSL elevation of the TCH.

(c) Divide the result by the GS tangent.

$$d = \frac{a - (b + c) + 1000}{\tan(\theta)}$$

where : a = highest terrain

b = THRe

c = TCH

θ = Glidepath Angle

d = Dist (ft) THR to 1000' point.

NOTE: To compute the 1500′ point, substitute 1500 for 1000 in the above formula.

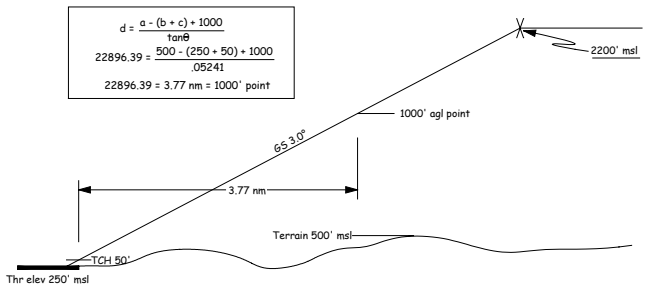

Figure 5-1

(d) When the GS (or EL) is inoperative, the altitude for flying the LOC-only (or AZ-only) may require an additional Class B/C/D/E Surface Area extension. Therefore, the 1,000′ point for LOC-only (or AZ-only) should be determined in the same manner as for nonprecision SIAPs (see paragraphs 507c(2) through (4)).

(e) To locate a 1,000′ point in a segment prior to the FAF, apply the provisions of paragraphs 507c(2) through (5).

(2) Nonprecision approach procedures. (NoPT w/FAF):

(a) When the SIAP specifies a minimum altitude at the FAF greater than 1,000' above the highest terrain in the final segment, the 1,000' point is assumed to be inbound from the FAF at a distance determined by application of a descent gradient of 500′/NM for distances in excess of 7 NM from runway threshold, and 300′/NM for distances at/less than 7 NM from the runway threshold; i.e., use both gradients to compute the 1,000′ point when the final segment is longer than 7 NM (see figures 5-2 and 5-3).

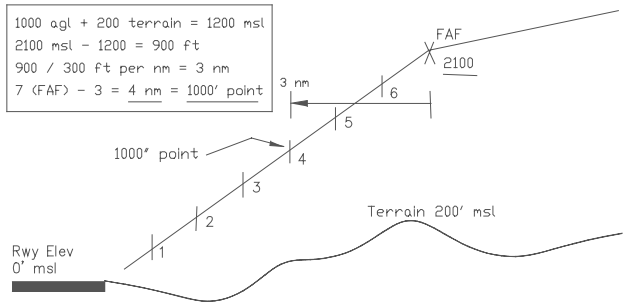

Figure 5-2

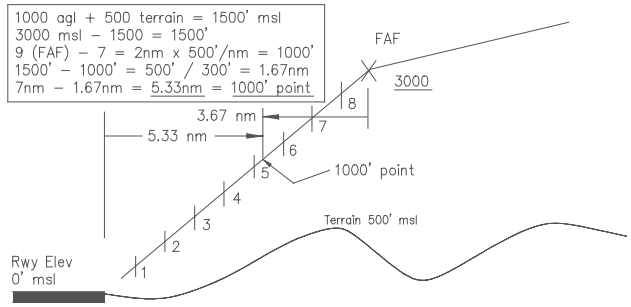

Figure 5-3

(b) When the SIAP specifies a minimum altitude at the IF greater than 1,000' above the highest terrain in the intermediate segment, the 1,000' point is assumed to be inbound from the IF at a distance determined by application of a 500'/NM descent from the IF (see figure 5-4).

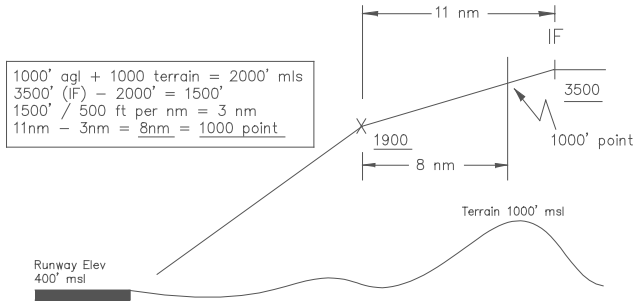

Figure 5-4

(3) Nonprecision approach procedures with Procedure Turn (PT):

(a) Procedure turn over facility (on-airport, no-FAF): Where a facility is located on the airport (NDB, VOR, VORTAC) and the SIAP does not incorporate FAF, the 1,000′ point is assumed to be 7 NM outbound beyond the facility for a 10-mile PT, and 5 NM outbound for a 5-mile PT.

(b) Procedure turn over FAF:

1. When the SIAP specifies a minimum altitude at the FAF less than 1,000′ above the highest terrain in the intermediate segment, the 1,000′ point is assumed to be 7 NM outbound beyond the FAF for a 10-mile PT, and 5 NM outbound for a 5-mile PT (see figure 5-5).

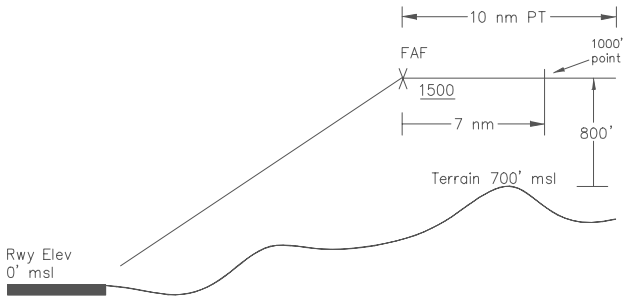

Figure 5-5

2. When the SIAP specifies a minimum altitude at the FAF less than 1,000′ above the highest terrain in the final segment, BUT greater than 1,000′ above the highest terrain in the intermediate segment, establish the 1,000′ point at the FAF.

3. When the SIAP specifies a minimum altitude at the FAF greater than 1,000′ above the highest terrain in the final segment, establish the 1,000′ point as per paragraph 507c(2)(a).

(c) PT over facility/stepdown fix AFTER the FAF:

1. Where the SIAP specifies a minimum altitude at the FAF less than 1,000′ above the highest terrain in the intermediate segment, the 1,000′ point is assumed to be outbound beyond the FAF at a distance determined by application of a 200″/NM descent to the FAF (see figure 5-6).

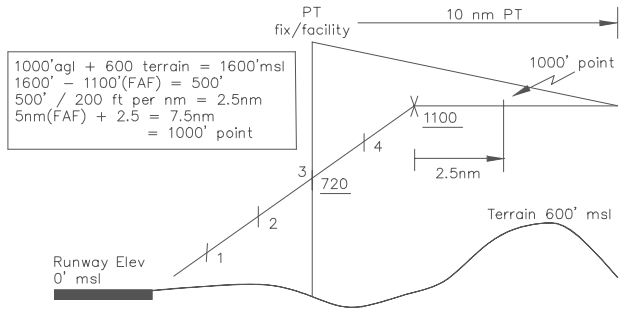

Figure 5-6

2. Where the SIAP specifies a minimum altitude at the final stepdown fix less than 1,000′ above the highest terrain in the final segment, while specifying a minimum altitude at the FAF greater than 1,000' above the highest terrain in the intermediate segment, the 1,000′ point is assumed to be inbound from the FAF at a distance determined by application of a 300′/NM descent gradient from the FAF. Use 500′/NM descent gradient for the distance that the FAF exceeds 7 NM from the threshold (see figure 5-7).

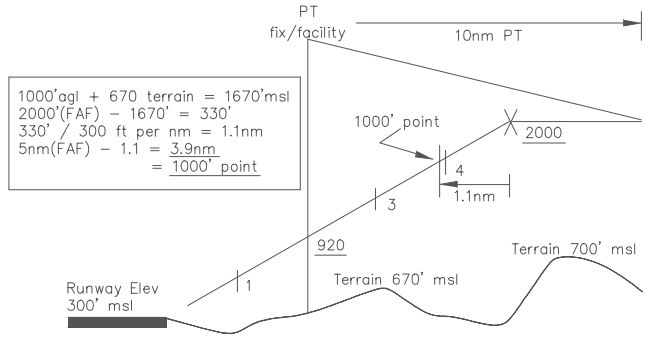

Figure 5-7

3. Where the SIAP specifies a minimum altitude at the final stepdown fix greater than 1,000′ above the highest terrain in the final segment, the 1,000′ point is assumed to be inbound from the final stepdown fix at a distance determined by application of a 300′/NM descent gradient from the final stepdown fix. Use 500′/NM descent gradient for the distance that the stepdown fix exceeds 7 NM from the threshold (see figure 5-8).

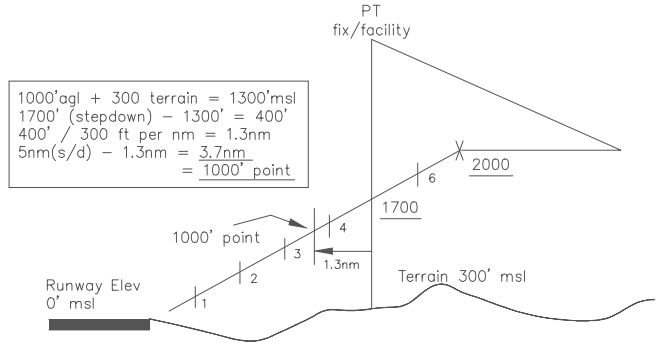

Figure 5-8

(d) Procedure turn over stepdown PRIOR to the FAF:

(**Condition:** Distance between the stepdown fix/facility and the FAF less than 5 NM - see TERPS Volume 1, paragraph 244d.

1. If the PT **completion altitude** is equal to or greater than, BUT the minimum **altitude at the stepdown fix/facility** is less than 1,000′ above the highest terrain in the segment underlying the course reversal, the 1,000′ point is assumed to be 7 miles from the stepdown fix/facility on the PT inbound leg (see figure 5-9).

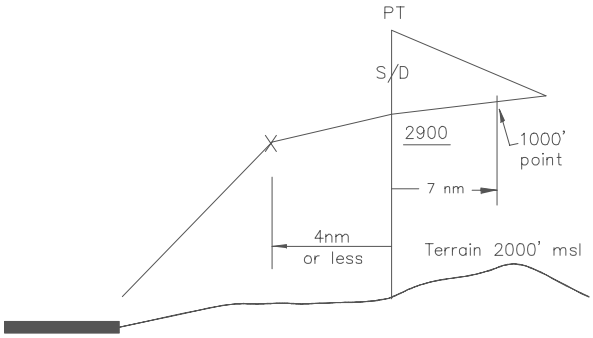

Figure 5-9

2. If the minimum **altitude at the stepdown fix/facility** is greater than 1,000′ above the highest terrain in the segment between the fix/facility and the FAF, the 1,000′ point is assumed to be inbound from the fix/facility at a distance determined by application of a 300′/NM descent from the stepdown fix/facility (see figure 5-10).

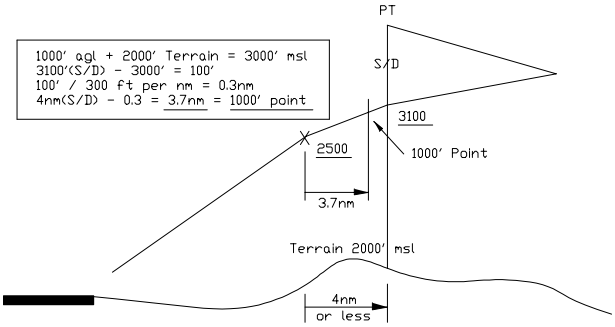

Figure 5-10

3. If the **1,000′ point is inside the FAF**, apply methodology in paragraph 507c(2)(a).

(**Condition**: Distance between the stepdown fix/facility and the FAF greater than 5 NM - see Order 8260.3, Volume 1, paragraph 244e). Since the **fix/facility becomes the IF** in this case, apply methodology in paragraph 507c(3)(e).

NOTE: Where the distance between the stepdown fix/facility and the FAF equals 5 NM, either TERPS Volume 1, paragraph 244d or 244e may be applied; use the appropriate guidance above or below accordingly.

(e) PT over the IF: (Intermediate Fix)

1. If the PT completion altitude is less than 1,000′ above the highest terrain in the segment underlying the course reversal, the 1,000′ point is in the PT maneuvering area.

2. If the PT completion altitude is greater than or equal to 1,000′ above the highest terrain in the segment underlying the course reversal, the 1,000′ point is assumed to be 7 NM from the PT fix/facility on the inbound leg (see figure 5-11).

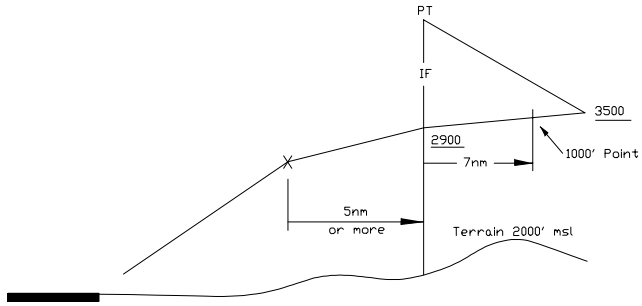

Figure 5-11

3. If the minimum **altitude at the IF** is greater than 1,000′ above the highest terrain in the segment underlying the course reversal, BUT less than or equal to 1,000′ above the highest terrain in the intermediate segment, the 1,000′ point is at the IF (see figure 5-12).

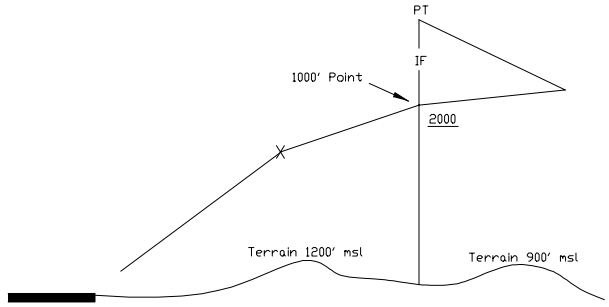

Figure 5-12

4. If the minimum **altitude at the IF** is greater than 1,000′ above the highest terrain in the intermediate segment, the 1,000′ point is assumed to be inbound from the IF at a distance determined by application of a 500′/NM descent from the IF (see figure 5-13).

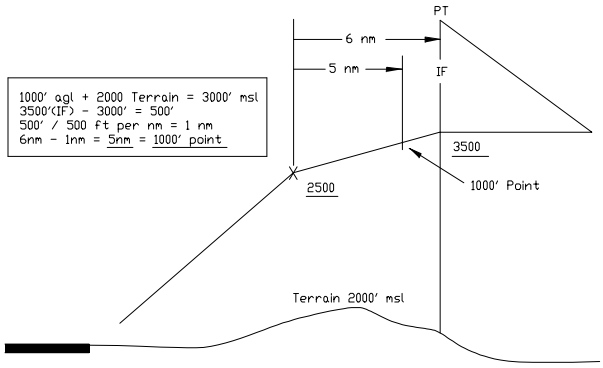

Figure 5-13

5. If the **1,000′ point is inside the FAF,** apply methodology in paragraph 507c(2)(a).

(4) Hold-in-Lieu-of Procedure Turn:

(a) At the FAF:

1. If the minimum **altitude at the FAF** is 1,000′ above the highest terrain in the final segment, the 1,000′ point is at the FAF (see figure 5-14).

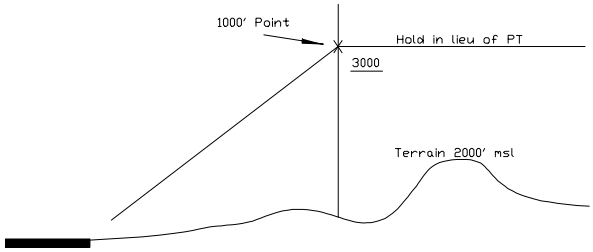

Figure 5-14

2. If the minimum **altitude at the FAF** is greater than 1,000′ above the highest terrain in the final segment, apply the methodology in paragraph 507c(2)(a).

3. If the **minimum hold-in-lieu-of-PT altitude** is equal to or greater than, BUT the minimum altitude at the FAF is less than 1,000′ above the highest terrain underlying the course reversal, the 1,000′ point is assumed to be in the holding pattern area. The Class B/C/D/E Surface Area extension must encompass the entire holding pattern primary area (see figure 5-15).

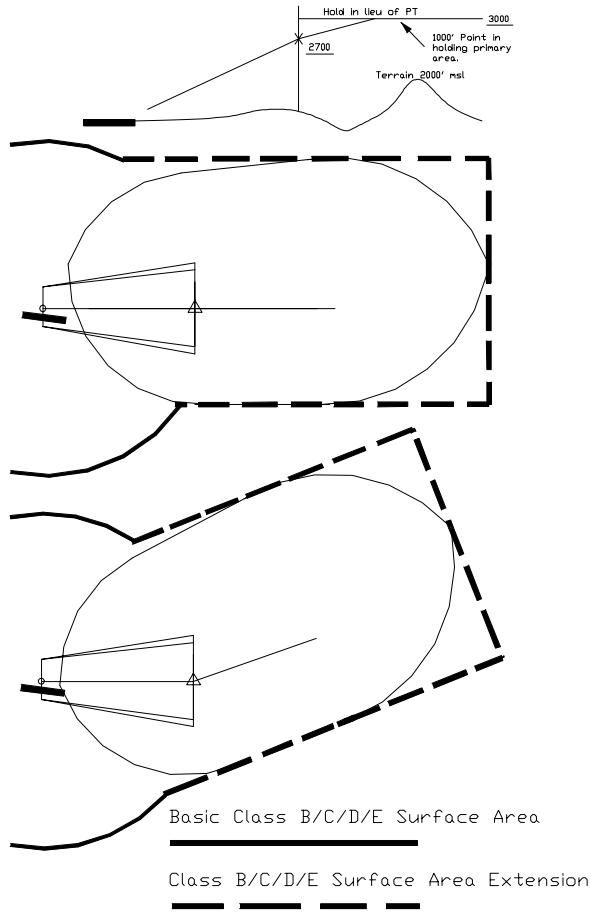

Figure 5-15

(b) At the IF:

1. If the minimum altitude at the IF is less than or equal to 1,000′ above the highest terrain in the intermediate segment, the 1,000′ point is at the IF (see figure 5-16).

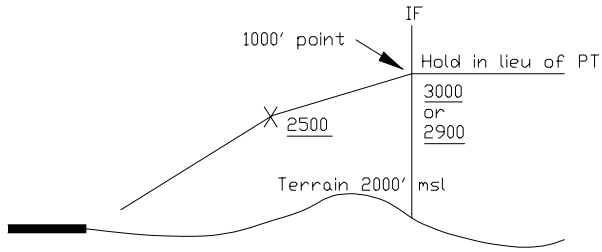

Figure 5-16

2. If the minimum **altitude at the IF** is greater than 1,000' above the highest terrain in the intermediate segment, the 1,000' point is assumed to be inbound from the IF at a distance determined by application of a 500′/NM descent from the IF (see figure 5-17).

application of a 500′/NM descent from the IF (see figure 5-17).

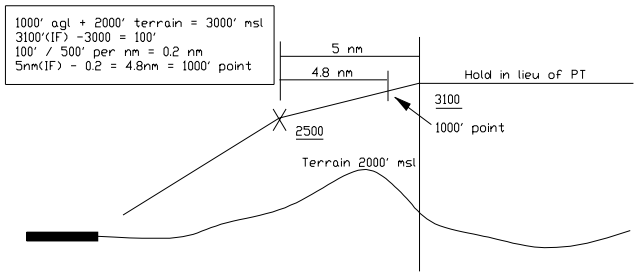

Figure 5-17

3. If the minimum altitude at the IF AND at the FAF are greater than 1,000′ above the highest terrain in the intermediate segment, apply the methodology in paragraph 507c(2).

(5) General. For PT distances greater than 10 NM (out to 15 NM maximum), increase the distance to the assumed 1,000′ point 1 NM for each mile in excess of 10 NM.

d. Class B/C/D/E Surface Area Extension Width.

(1) ILS, MLS, WAAS, LAAS, LNAV/VNAV: The width of the Class B/C/D/E Surface Area extension for ILS, MLS, WAAS, LAAS, LNAV/VNAV is established by determining the width of the final approach primary TERPS area at the point the aircraft reaches 1,000′ AGL (see paragraph 507c(1)). The width of the extension must not be less than 2 NM (1 mile each side of the localizer/azimuth course) regardless of the width of the precision primary area at the 1,000′ point.

(a) Refer to figure 5-18. If the aircraft reaches 1,000′ AGL at point A, the width of the surface area at point A is the same as the measured width of the procedure trapezoid at this point. Apply the provisions of paragraph 507c(1) to determine the distance from the threshold to the 1,000′ point; then subtract 200′. The resultant figure is then used as "D" in the precision for determining the half-width of the precision primary area:

1/2W = .01752D + 700'.

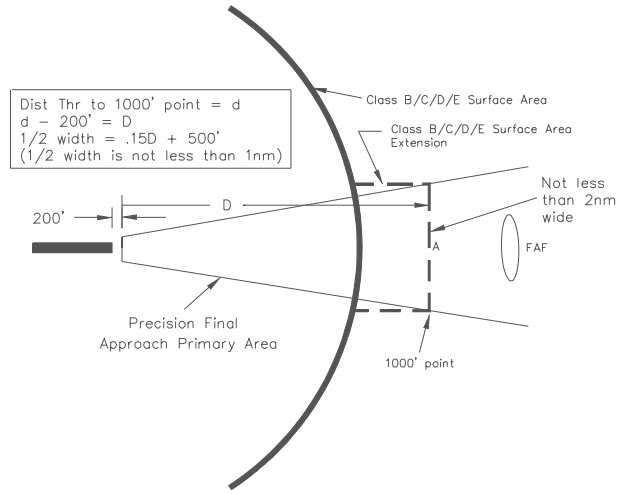

Figure 5-18

(b) Where the 1,000′ point is located in the intermediate segment, additional analysis is required. Since the PFAF and the underlying LOC or AZ FAF may not be collocated, the respective intermediate segments may have different widths at any particular distance from the FAF. The **width** of the Class B/C/D/E Surface Area extension at the 1,000′ point must be the **greater** of the two segment widths. Use the guidance in TERPS Volume 1, chapter 2 for calculating the respective widths.

(2) Nonprecision: The width of the Class B/C/D/E Surface Area extension for procedures without vertical guidance is established by measuring the width of the final approach primary area at the widest point between the surface area boundary and the 1,000′ point. For final segments which expand toward the basic surface area boundary, the width is measured perpendicularly to centerline at the point where the course crosses the surface area boundary. Where Class B/C/D/E Surface Area has not been established prior to IAP development, obtain a tentative surface area dimension from the regional ATD for application of this paragraph. The width of the extension must not be less than 2 NM (1 NM each side of segment centerline) (see figure 5-19).

(b) If the penetration turn completion altitude is greater than 1,000′ above the highest terrain in the area prior to the 10-mile point, the 1,000′ point is assumed to be inbound from the turn completion point at a distance determined by application of a 500′/NM descent gradient.

(2) 1,500′ point: Refer to TERPS Volume 1, table 2. The distance to the point of penetration turn completion and the "distance turn commences" from table 2 are assumed to be equal.

(a) If the penetration turn completion altitude is less than 1,500′ above the highest terrain underlying the penetration turn, the 1,500′ point is in the penetration turn area. Transition area boundaries must encompass the entire penetration turn area. Provide the appropriate ATC office a drawing clearly depicting the airspace required (see paragraph 507k(12)).

(b) If the penetration turn completion altitude is greater than or equal to 1,500′ above the highest terrain underlying the penetration turn, AND less than 1,500′ above the highest terrain in the straight segment prior to the 10-mile point, the 1,500′ point is at the turn completion point.

(c) If the penetration turn completion altitude is greater than 1,500′ above the highest terrain underlying the penetration turn in the straight segment prior to the 10-mile point, the 1,500′ point is assumed to be inbound from the turn completion point at a distance determined by application of a 500′/NM descent gradient.

(d) If the FAF altitude is greater than 1,500′ above the highest terrain in the final segment, apply the methodology in paragraph 507c(2)(a) using a 500′/NM descent gradient from the FAF.

h. HI-TACAN, VOR/DME, or VOR (with FAF).

(1) 1,000′ Point:

(a) If the penetration turn completion altitude is greater than 1,000′ above the highest terrain in the segment prior to the IF, the 1,000′ point is assumed to be inbound from the turn completion point at a distance determined by application of a 500′/NM descent gradient.

(b) If the penetration turn completion altitude equals 1,000′ above the highest terrain in the segment prior to the IF, the 1,000′ point is at the IF.

(c) If the IF altitude is greater than 1,000′ above the highest terrain in the intermediate segment, the 1,000′ point is assumed to be inbound from the IF at a distance determined by application of a 500′/NM descent gradient.

(d) If the FAF altitude is greater than 1,000′ above the highest terrain in the final segment, apply the methodology in paragraph 507c(2)(a).

(2) 1,500′ Point:

(a) If the penetration turn completion altitude is less than 1,500′ above the highest terrain between the turn completion point and the IF, the 1,500′′ point is in the penetration turn area.

(b) If the penetration turn completion altitude equals 1,500′ above the highest terrain between the turn completion point and the IF, the 1,500′ point is at the turn completion point.

(c) If the penetration turn completion altitude is greater than 1,500′ above the highest terrain between the turn completion point and the IF, the 1,500′ point is assumed to be inbound from the turn completion point at a distance determined by application of a 500′/NM descent gradient.

(d) If the IF altitude is greater than 1,500′ above the highest terrain in the intermediate segment, the 1,500′ point is assumed to be inbound from the IF at a distance determined by application of a 500′/NM descent gradient.

(e) If the FAF altitude is greater than 1,500′ above the highest terrain in the final segment, apply the methodology in paragraph 507c(2)(a) using a 500′/NM descent gradient from the FAF.

i. Radar Vector to FAF (Radar Required).

(1) If the FAF altitude is greater than 1,000′ above the highest terrain in the final segment, apply the methodology in paragraph 507c(2)(a).

(2) If the FAF altitude is less than 1,000′ above the highest terrain in the final segment, the

1,000′ point is located PRIOR to the FAF (see paragraph 507k(4)).

(3) If the FAF altitude is greater than 1,500′ above the highest terrain in the final segment, apply the methodology in paragraph 507c(2)(a) using a 500′/NM descent gradient from the FAF.

(4) If the FAF altitude is less than 1,500′ above the highest terrain in the final segment, the 1,500′ point is located PRIOR to the FAF (see paragraph 507k(7)).

j. Radar Vector to IF (Radar Required).

(1) If the IF altitude is greater than 1,000′ above the highest terrain in the intermediate segment, apply the methodology in paragraph 507c(2)(b).

(2) If the IF altitude is less than 1,000′ above the highest terrain in the intermediate segment, the 1,000′ point is located PRIOR to the IF (see para-graph 507k(4)).

(3) If the IF altitude is less than 1,500′ above the highest terrain in the intermediate segment, the 1,500′ point is located PRIOR to the IF (see para-graph 507k(7)).

(4) If the 1,500′ point is at/inside the IF, apply the methodology in paragraph 507e(2)(b).

k. Information to be forwarded to ATC: See also paragraphs 506c and 909c(6).

(1) ARP coordinates; threshold coordinates (if straight-in authorized).

(2) FAF or IF coordinates.

(3) Distance from ARP (for circling-only), runway threshold (for straight-in), FAF, or IF to the 1,000′ point. If applicable, state: **"1,000′ point located outside FAF** (or IF) **- see current MVA Chart,"** and leave (5) blank.

(4) Width of the segment primary area at the widest point between the Class B/C/D/E Surface Area and the 1,000′ point; and the highest terrain elevation in the segment containing the 1,000′ point (see paragraph 507d(2) and figure 5-19).

(5) True course (to the hundredth of a degree) of the segment in which the 1,000′ point is located.

(6) Distance from ARP (for circling-only), runway threshold (for straight-in), FAF, or IF to the 1,500′ point. If applicable, state: **"1,500′ point located in the PT maneuvering area"**; or **"1500′ point located in holding pattern area"**; or **"1,500′ point located outside IF - see current MVA Chart;"** or **"1,500′ point located outside FAF - see current MVA Chart"**; and leave (7) blank. (The regional AT office will then establish the transition area in accordance with Order 7400.2)

(7) Width of the segment primary area at the widest point between the Class E 700′ airspace (transition area) and the 1,500′ point; and the highest terrain elevation in the segment containing the 1,500′′ point (see paragraph 507e).

(8) True course (to the hundredth of a degree) of the segment in which the 1,500′ point is located.

(9) Highest terrain elevation in the PT (or hold in lieu of PT) primary area excluding entry zone. Include holding pattern size.

(10) For high-altitude penetrations, para-graphs 507k(1) through (9), except paragraph 507k(2), apply. If applicable, state: **"1500′ point located in the penetration turn area,"** and leave (8) blank.

(11) For Terminal Arrival Area (TAA) application, AVN-100 should, when necessary, provide the ATD with information describing the TAA boundaries so that an appropriately sized radius from the ARP can be established to contain the TAA. If not known at that time, provide the information to the ATD when it is available. The ATD is allowed to establish whatever radius from the ARP is necessary to contain the TAA. In the standard letter from AVN-100 to the regional ATD (or backside of the 8260-9 if used for this purpose) in which airspace requirements stated in this chapter are detailed, provide the TAA boundary radii values and the radii center-points in terms of fix names and coordinates with text describing the shape of the respective areas. Include a simple drawing to help the ATD in visualizing the TAA airspace requirements.

l. SIAP Adjustment: Where the SIAP will not be derogated, consideration should be given to adjusting altitudes whereby the designation of unnecessary controlled airspace can be eliminated. The
adjustment of altitudes should not be made where the descent gradients are increased above optimum.

m. Conversion: The appropriate Air Traffic office will convert the submitted nautical mile computations to statute miles to determine the actual dimensions required in accordance with Order 7400.2. However, AVN-100 must review airspace dockets to determine that the proposed airspace encompasses the appropriate portions of the IAP consistent with the data forwarded in accordance with paragraph 507k.

SECTION 4. CONTROLLED FIRING AREAS

513. DESCRIPTION.

A controlled firing area is an area in which firing of ordnance, lasers, etc., is conducted under controlled conditions so as to eliminate the hazard to aircraft.

514. ESTABLISHMENT OF CONTROLLED FIRING AREAS.

The FAA has the authority for final decision in regard to the establishment of controlled firing areas. However, this is not accomplished through publication of rules, regulations, or orders. Requests for these areas are coordinated and processed by representatives of ATC without rulemaking procedures.

515. PRECAUTIONS.

In controlled firing areas, the responsibility for safety will be entirely with the using organization, which will conduct its firing so as to eliminate the hazard to aircraft. Generally, the control necessary to assure safety to aircraft is dependent upon the type of activity, terrain, and other factors involved. The precautions required to eliminate the hazard must be determined individually for each activity requested. Minimum required precautionary measures are set forth in Order 7400.2, paragraph 840.

516. AVN-100 REVIEW AND COORDINATION.

a. Considerations. The following facts must be considered in the review and coordination of proposed controlled firing area letters of agreement:

(1) There are no flight restrictions within controlled firing areas.

(2) These areas are not depicted on aeronautical charts.

(3) All pilots are not aware of the locations of these areas.

b. Review. In view of the above, the restrictions and provisions should be carefully reviewed to ensure that all facts have been considered, and that an adequate level of safety will be maintained. The type and volume of IFR traffic are usually well known to ATC personnel. However, the type of local VFR operations is usually best known by Flight Standards personnel.

SECTION 5. RESTRICTED AREAS

517. GENERAL.

A restricted area is airspace designated under 14 CFR Part 73 within which the flight of aircraft, while not wholly prohibited, is subject to restriction. No person may operate an aircraft within a restricted area between the designated altitudes and during the time of designation without the permission of the using or controlling agency.

Obstacle Clearance. Restricted areas as such are not considered obstacles to the establishment of instrument flight procedures. However, obstacle clearance must be provided over terrain and/or man-made obstacles within the restricted area which underlies the flight procedure clearance area. The lateral and vertical boundary of the restricted area must be used to define the obstacle location when tethered balloons are within.

518. LETTER OF PROCEDURES.

A letter of procedure between the using agency of a joint-use restricted area and the ATC facility (controlling agency) may be promulgated to allow non-participating aircraft to transit the restricted area when the area is not being used for its designated purpose.

519. RESERVED.

CHAPTER 8. INSTRUMENT APPROACH PROCEDURES DATA TRANSMITTAL SYSTEM

SECTION 1. GENERAL

800. GENERAL.

a. Forms. Forms in the 8260-series are used for the documentation and publication of instrument flight procedures. The National Aeronautical Charting Office (NACO) and other charting agencies publish instrument flight charts based on data contained on these forms.

b. General design requirements. Instrument approach procedures must provide a smooth transition from the en route structure, and provide the pilot with sufficient information to effect a safe instrument approach to a landing or missed approach. In the interest of safety, these charts must be easy to interpret. The speed of modern aircraft demands that greater simplicity, minimum cockpit workload, and ease of interpretation be incorporated in the design of the instrument procedure. Criteria used in the design of standard instrument procedures is contained in Order 8260.3B, United States Standard for Terminal Instrument Procedures (TERPS), and other specific 8260-series orders.

NOTE: Attempts to apply all possible options permitted by criteria to obtain lowest possible minimums should not be made if the resultant procedure is overly complex and only a minor operational benefit is gained.

c. Give full consideration to the environmental impact of procedures on local communities. Avoid schools, churches, hospitals, stadiums, rest homes, populous residential areas, and other noise-sensitive areas whenever possible due to the potential for adverse environmental impact. **Where the location of facilities and/or the flow of air traffic will permit, use the highest possible altitudes consistent with optimum descent angles/rates in all segments of approach procedures to provide the least noise interference.**

SECTION 2. FORM USE AND PREPARATION

801. USE OF FORMS.

a. Procedures published Under Title 14, Code of Federal Regulations (14 CFR), Part 97. SIAPs authorized for public use are approved by AVN-100, and published as rules in the Federal Register by AFS-1 using reference to FAA standard forms. An index of all original SIAPs, amendments, and cancellations is published in the Federal Register to provide public notice of the rulemaking actions.

b. Instrument approach procedures must be prepared on the forms listed below, or approved computer generated equivalents, as suitable for reproduction.

(1) ILS Standard Instrument Approach Procedure, Form 8260-3 [ILS, MLS, RNAV, and LDA (when associated with a glide slope)].

(2) RADAR Standard Instrument Approach Procedure, Form 8260-4.

(**3) Standard Instrument Approach Procedure (SIAP),** Form 8260-5 [LOC, LOC/DME, LDA, LDA/DME, VOR, VOR/DME, VOR/DME or TACAN, NDB, SDF, VOR/DME RNAV, and other nonprecision procedures].

(**4) Continuation page of Standard Instrument Approach Procedure**, Form 8260-10. Used as a continuation sheet for instrument approach procedure forms listed above, and for DF procedures.

c. Special Use Procedures. Special use instrument approach procedures are documented on Form 8260-7. These procedures are developed for individual operators and are issued to the user through Operations Specifications or Letters of Authorization (see chapter 4, section 4.

d. Helicopter RNAV Approach Procedures.

(1) For documentation purposes, consider COPTER GPS approaches to be grouped into three categories:

(a) Approach to a runway. COPTER RNAV (GPS) RWY XX approach procedure, not associated with a heliport.

(b) Approach to a Heliport. COPTER RNAV (GPS) XXX approach procedures that are either straight-in to a heliport, or constructed using point-in-space (PinS) criteria and noted "**PROCEED VISUALLY**…;" i.e., visual segment evaluated from MAP to helipoint.

(c) Approach to a PinS. COPTER RNAV (GPS) XXX approach procedures constructed using PinS criteria and noted "**PROCEED VFR**…;" i.e., visual segment evaluated only at the MAP.

(2) Document one destination airport or heliport on the 8260-3/5/7 forms for approaches to a runway, and approaches to a heliport, or a PinS approach to a heliport noted "**PROCEED VISUALLY**…" PinS approach procedures noted "**PROCEED VFR**…" may serve more than one destination.

e. Forms 8260-15A, B, and C Departure Procedures/Takeoff Minimums. Use 8260-15-series forms to document textual/graphic departure procedures and non-standard takeoff minimums. Refer to Order 8260.46, Departure Procedure (DP) Program, for instructions.

802. FORM PREPARATION.

a. Preparation. All entries may be in upper case letters or as defined in the examples in this chapter. Form 8260-3 has the title information and appropriate Part 97 subpart pre-printed. When other procedures are documented, delete the term "ILS" and substitute the desired equipment acronym in its space. Form 8260-4 has the title information and appropriate Part 97 subpart pre-printed. On Form 8260-5, enter the type of procedure, as listed below, in the space preceding the phrase "Standard Instrument Approach Procedure." For DF procedures on Form 8260-10, enter **"Emergency DF"** and leave Part 97 subpart **blank**.

b. Appropriate Part 97 subparts for individual types of procedures are:

(1) 97.23 VOR, VOR/DME, VOR or TACAN, and VOR/DME or TACAN.

(2) 97.25 LOC, LOC/DME, LDA, LDA/DME, LDA w/GS, SDF, and SDF/DME.

(3) 97.27 NDB and NDB/DME.

(4) 97.29 ILS, MLS, LAAS, WAAS PA, and MLS/RNAV.

(5) 97.31 RADAR.

(6) 97.33 RNAV (includes LNAV, LNAV/VNAV, and LPV.)

(7) 97.35 COPTER (includes all COPTER SIAPs, regardless of navigation sensor.)

(8) 97.37 Takeoff Minima and Obstacle Departure Procedures.

c. Combined Charting. Certain instrument approach procedures can be combined on one chart where procedural data are compatible. Where an NDB or compass locator is established at an ILS outer marker site, the individual ILS and NDB procedures should be developed in a manner that will permit combined charting, provided TERPS criteria can be complied with for both procedures. Different types of civil instrument approach procedures must not be combined on SIAP forms except for "ILS or LOC", "ILS or LOC/DME", "VOR or TACAN" and "VOR/DME or TACAN" SIAPs predicated on VORTAC facilities. Where military offices request combined procedures based on different types of facilities, document separate but compatible procedures on the appropriate forms. Combining of instrument approach procedures on military charts will then be accomplished as a cartographic function of the National Imagery Management Agency (NIMA). RNAV SIAP charts may only depict a single procedure track from the IF through the missed approach. If different tracks are required inside the IF (e.g., for different aircraft categories), separate procedures must be published.

803. COURSE AND DISTANCE INFORMATION.

a. Application. Assigned magnetic variation must be applied to terminal routes as follows (see paragraph 857n):

(1) Facility to Facility: Variation of the first facility applies.

(2) Dog leg: Variation of each facility forming the route applies to its segment.

(3) Fix to Facility or Facility to Fix: Variation of the facility applies.

(4) RNAV Routes: Variation of the airport/heliport upon which the SIAP is based must be used for all RNAV routes on the procedure.

(5) Dead Reckoning: Variation of the next facility providing course guidance applies.

b. Calculations must be made using the most accurate data available (bearings and distances to two decimal places). Magnetic variation of record, in whole degrees, is then applied.

c. Data Elements. Except where otherwise noted, enter data elements relating to course, bearing, and distance to the nearest hundredth value. Final results are rounded by NACO.

d. Rounding. Where rounding to the "nearest" value is appropriate, and except where otherwise required, round numerical values .01 through .49 DOWN, and .50 through .99 UP. This applies to distances, elevations, altitudes, degrees, etc. For example, 1100.49' becomes 1100', while 1100.50' becomes 1101'. Similarly, 131.49^{o} becomes 131°, while 131.50^{o} becomes 132°.

804. COMMUNICATIONS DATA.

a. Communications requirements and frequencies for inclusion on instrument approach procedures charts will be provided by NFDC in accordance with Order 7910.2, Frequencies Listed on Instrument Approach Procedure Charts.

b. Where specific local communication requirements exist for published instrument approach procedures, and where these data are not currently charted, enter one of the following under "Additional Flight Data:"

(1) Where approach control service is provided by ARTCC through a remote site: **"Chart Indianapolis Center frequency."**

(2) Where approach control service is provided through the controlling FSS by LRCO or RCO. The controlling FSS will be indicated: **"Chart Indianapolis Radio LRCO (RCO)."**

(3) Where the primary remote altimeter source is obtainable from an AWOS/ASOS, chart the location and frequency: **"Chart Flippin AWOS-3, 134.875."**

805. TERMINAL ROUTES GENERAL.

Terminal routes consist of feeder, initial, and intermediate approach segments. They provide aircraft guidance from the en route airway structure to the final approach fix. Specify a minimum number of routes required to satisfactorily transition the aircraft to the terminal environment.

a. Non-Radar Routes. Since radar vectoring is an approved method of providing procedure entry, limit the number of non-radar routes where radar vectoring is provided on a 24-hour basis. Where practical, provide at least one non-radar route to ensure transition from the en route structure in the event of radar/communications failure. Radar vectoring may be provided through any approach segment up to and including the final approach fix (intermediate fix with ARSR). See paragraph 404o.

b. Transition. Do NOT develop instrument approach procedures that require **"DME or RADAR"** as the sole means for procedure entry if any other type of transition is available, unless specifically requested by ATC. It is not necessary to designate terminal routes which coincide with segments of the en route structure; however, these routes must be designated when a lower altitude is authorized or when clarity is essential. With the exception of arc feeder segments, terminal routes (including arc initial approach segments) originating on an airway at other than a navigation facility require the establishment of a named fix to identify the starting point of the route. The fix must be common to the en route structure and instrument approach procedure.

c. Turn Limitation. When a procedure turn or holding pattern entry is not authorized, and airways or routes, which are not specified as terminal routes lead to the fix where the intermediate segment begins, the procedure must ensure that the angular limitation on turns over the intermediate fix is not exceeded. This is not mandatory when ATC agrees to provide full-time radar vectoring service for these routes.

d. Charting. All terminal routes listed in the Terminal Routes section of the 8260-series forms must be charted or identified in the planview of the instrument approach chart.

e. Feeder Routes. Where feeder routes are required to transition from the en route structure, they must terminate at another feeder fix, or an initial approach fix, or at the facility from which a procedure turn or holding pattern entry is authorized. En route obstacle clearance criteria apply to feeder routes.

f. Multiple DME Sources. When an ILS (or LOC or LDA) facility has collocated DME, it is necessary to reduce the potential for confusion with other DME sources in the terminal area. Failure to tune to the ILS DME when inbound can result in incorrect fix indications. Apply the following guidance:

(1) Delete the requirement to use two DME facilities on ILS or LOC/LDA procedures wherever possible.

(2) Delete DME arcs to LOC/LDA courses at locations where radar vectoring is possible. In some locations, this may require a planview note: **"Radar Required."** See paragraph 855h. Where radar is not available, delete DME arcs where an alternate means of procedure entry is available.

(3) On procedures using two DME facilities, one of which is associated with a LOC or LDA, and both of which are forward of an aircraft on the LOC/LDA course, the following is required: **"Chart profile note: Use I-XXX DME when on the localizer course."** This applies to front and back course procedures regardless of glide slope availability.

*NOTE: Similar precautions may be necessary for **MLS**. Evaluate each situation and take the appropriate action.*

g. Initial Approach Segments.

(1) Initial Approach Segments not requiring a Course Reversal. Evaluate the flow of air traffic to determine the need for routes that do not require a course reversal, i.e., fixes, airways, waypoints. Where a course reversal exists on a SIAP, each initial approach segment for which a course reversal is not required must include a designation of **"NoPT"** (see paragraph 851a(3)). If a course reversal is *not authorized* for any of the terminal routes, the NoPT designation is not appropriate; indicate instead that a procedure turn is not authorized (see paragraph 852a(3).

(2) Specify an arrival sector from which course reversal must not be made when NoPT designations will result in an excessive number of terminal routes. Place an applicable statement in the Notes Section of the 8260-series form.

Examples:

"Chart planview note: NoPT for arrival on ABC VORTAC airway radials 302 CW 096."

"Chart planview note: NoPT for arrival at NICOL on V-244 Westbound, V-230 Southwest bound."

"Chart planview note: Procedure NA for arrivals at RUDVE via V140 Westbound, and arrivals at MCJEF via V140 Eastbound."

(3) Initial Approach segments based on straight courses. All initial approach segments that meet criteria for angle of intercept between the initial and intermediate segments, TERPS Volume 1, paragraphs 232a(1) and (2), must join the intermediate segment at a common intermediate fix where possible. Where more than one segment joins at a common fix, a common altitude should be selected whenever descent gradient is not compromised.

(4) Arc Initial Approach Segment. Requirements for arc initial approach segments must be fully evaluated to determine if this type of procedure entry is essential to the local traffic flow. Experience indicates that arc initial segments have been established at locations where they are used on a very limited basis or have not been fully accepted by the user. Long arcs and/or multiple arcs have contributed to undesirable chart clutter with minimum operational advantage.

(a) An arc initial segment in a **radar environment** must not be authorized unless it is operationally required.

(b) When a DME arc segment of an approach lies along an arc that traverses an area of **unusable radial information,** the provisions of Order 8200.1, paragraph 214.3 apply.

(c) Arc initial segments should be authorized via the **shortest routing** when flight time can be reduced.

(d) Arc initial segments must be designated by **CW** for clockwise and **CCW** for counter-clockwise.

(e) Arc initial segments must be designed to satisfy requirements for executing the instrument approach. They must NOT be established for the **convenience** of routing aircraft around a terminal area.

(f) Arc initial segments less than 3 miles in length are not recommended. Use of aircraft heading to intercept the intermediate course should be considered as an alternate action in lieu of short arc segments.

(g) DME Arc courses must be predicated only on **collocated facilities** providing azimuth and DME information. Arc initial segments must not be authorized on DME collocated with ILS or localizer facilities due to the lack of constant azimuth information. See Order 6050.32, appendix III, section 2 for collocation parameters.

h. Lead Radials. In addition to the angle of interception requirements of TERPS Volume 1, paragraph 232a(1), a 2-mile lead radial (1 mile for COPTER procedures) must be published with arc initial approaches when the DME is not collocated with the facility providing the procedural course guidance. The lead radial provides information for aircraft with single receiving equipment to change the receiver to the localizer or other facility providing the course guidance and to ensure the aircraft is within the clearance coverage area of LOC facilities before changing frequency or accepting on-course indication.

i. Identification of Initial Approach Fix (IAF). Because of military requirements, IAFs must be identified on civil public use procedures.

j. Intermediate Segments.

(1) When a procedure turn or holding pattern entry is authorized at the FAF and a straight-in intermediate segment (without initial) is also authorized, data on the intermediate segment must be included in the Terminal Routes block. In this situation, add **(IF)** and **(NoPT)** to the intermediate segment.

(2) When the course reversal fix is outside the FAF, the segment(s) from the course reversal fix to the FAF must be included in Terminal Routes, unless both fixes are marked by DME from the same source or LOC minimums are not authorized.

(3) When a procedure turn or holding pattern in-lieu-of-PT is not authorized, enter pertinent data in the Terminal Routes section and on lines 2 and 4 of the Form 8260. Refer to paragraph 852b(2).

(4) Develop intermediate segments for all IAPs except "hold-in-lieu-of-PT" and "PT No-FAF" procedures. Where intermediate segments have been established, the intermediate fix (IF) will be defined on the procedure in the planview.

k. RNAV procedures must have a hold-in-lieu-of PT (course reversal) established at the IF(IAF) (when one

is established as such) on all procedures based on the "Basic T" design or its derivations.

806. TERMINAL FIXES.

Name terminal fixes in accordance with paragraph 264 and document on Form 8260-2. Named facilities do not require this documentation unless holding is established.

a. Computer Navigation Fixes (CNF). Name CNFs using a 5-alpha character non-pronounceable name. To distinguish CNFs from conventional reporting points, fixes, and intersections, enclose the name in parenthesis; e.g., (WFWBG) on 8260-series forms other than the 8260-2.

b. Audit Trail. List terminal procedures using a fix in the "Remarks" section of the 8260-2. This helps ensure that affected procedures are not overlooked when the fix is modified.

c. DME References. When designating fixes on Form 8260-3, -4, -5 and -7, include DME references to the hundredth of a nautical mile when DME is appropriate and available. Provide the fix name and DME distance as follows:

(1) DME fix, with course and DME from the **same facility:**

JOANI/7.00 DME

(2) DME fix, with DME not paired with course facility, identify fix and facility providing DME: **JOANI/ABC 7.00 DME**. If both facilities have the **same 3-letter identifier**, fully identify the DME facility: **JOANI/XYZ VORTAC 7.00 DME.**

(3) Intersection fix, with DME available from more than one facility forming the fix, identify the intersection and the facility providing the required DME information: **JOANI INT/ABC 7.00 DME.** If both facilities have the **same 3-letter identifier**, fully identify the DME facility: **JOANI INT/XYZ VORTAC 7.00 DME.**

d. A full description of a fix, when it first occurs on the form, satisfies charting requirements**.** For example, entering "ARNET LOM/INT/ABC 8.53 DME" or "NIXON INT" once in the Terminal Routes section, and thereafter entering the fix name only wherever else it occurs on the form ensures that the fix will be charted correctly on both the planview and the profile sections of the approach chart. **For RNAV procedures,** describe a fix by name only. NACO will chart fixes under what is known as the "hierarchy concept." This means if no NAVAID or ground-based fix exists, the point will be charted as a waypoint. Except for RNAV procedures, when a fix is included in the missed approach instructions, use a full description of a fix appropriate to its use in the missed approach procedure.

Example: (Fix name: MORIS LOM/INT/7.00 DME) **"CLIMB TO 3600 DIRECT MORIS LOM AND HOLD."**

Example: (Fix name: DAVEE INT/16.00 DME) **"CLIMB TO 3600, THEN CLIMBING RIGHT TURN TO 4000 VIA ABC VORTAC R-180 TO DAVEE INT/16.00 DME AND HOLD."**

RNAV Example: **"Climb to 2000 direct DAKEY and hold."**

e. When no fix overlies an LOM, the identifier or the 5-letter name may be used: **AB LOM** or **ABBAH LOM.**

f. An alternate method of identifying an LOM, such as an **INT** or **DME**, is often helpful in ILS or LOC SIAPs but an INT is not appropriate in NDB SIAPs.

g. ATD References. Describe RNAV (including VOR/DME RNAV) ATD fixes with respect TO the next point or waypoint: **JIMMY/5.00 NM TO NIXON; BUMBO/5.00 NM TO RW16L.**

h. RNAV must not have a holding-in-lieu-of PT (course reversal) nor missed approach holding established at the final approach fix (FAF).

807-809. RESERVED.

SECTION 3. CERTIFICATION, PROCESSING, AND REVIEW

810. GENERAL.

Certifiying, processing, and reviewing instrument approach procedures must be accomplished as outlined in this section.

811. CERTIFICATION AND DISTRIBUTION OF SIAPs.

Certification of instrument approach procedures must be accomplished on the reverse side of the appropriate 8260-series form. Instructions for completion of the entries are as follows:

a. All Affected Procedures Reviewed. Enter **"X"** in the appropriate space. A "Yes" indicates that all requirements for a periodic review have been accomplished. A "No" indicates that only the items listed in the "Changes" block were reviewed (see paragraphs 241a(2) and 813c).

b. Coordinates of Facilities. When a facility is referred to on a procedure for the first time, enter the facility coordinates. The source data for the coordinates must be identified; e.g., **AF survey, ALP, OC, Map Study, AVN, NOS, etc.** If sufficient space is not available to list coordinates of all new facilities, the space under "Changes" must be used. Leave **blank** for RNAV procedures.

c. Required Effective Date. The effective date must be either "Routine." "Proposed," "Concurrent," or "Hard." See Order 8260.46 for guidance regarding effective date entries for departure procedures.

(1) Routine Dates. If a specific effective date is not required, enter the word "**ROUTINE.**"

(2) Proposed Dates. Proposed dates may be used for any SIAP, **provided the procedure does not require any en route charting changes.** This includes SIAP originals, amendments, and cancellations. Proposed dates must not be used for departure procedures or STARs. Enter a proposed date as: "P12/08/02." If proposed SIAPs are rescinded, NFDC must be notified to take appropriate action in the Transmittal Letter (TL).

(3) Concurrent Dates. If the SIAP is part of a large package and/or publication is to be concurrent with another event, as when it is associated with an airspace case, enter the concurrent date as **"C12/08/02,"** or the airspace docket number as: **"C02-AGL-29."** Use the following standard Note in the lower part of the REASONS block: **"Effective concurrent with KOKC ILS RWY 17R Amdt 8,"** or **"Effective concurrent with Airspace Docket 02-AGL-29."**

(4) Hard Dates. When a specific effective date is required; e.g., facility Mag Var rotation, enter a hard date as **"12/08/02."** Hard dates require updating NFDC database 56 days in advance of charting. Hard dates are not to be used as an "easy to use" option. Where a hard date is required for reasons other than a magnetic variation change, request a deviation from policy as detailed below.

(5) Deviations. Deviations from the previous guidelines require agreement between AVN-100, AVN-500, and ATA-100 (see Order 8260.26). AFS-420 must be informed of all coordinated deviations.

d. Coordinated With. Coordinate all original processing and revisions to instrument approach and departure procedures with appropriate civil aviation organizations, the appropriate ATC facilities, and the airport owner or sponsor. Coordinate with appropriate FSDO offices according to the type of operations conducted at the airport. Coordinate with other interested organizations as necessary. A copy of the graphic sketch required by paragraph 860e must be included in all procedure packages that are submitted for coordination. Coordinate procedures with ATA if the airport is served by scheduled air carriers. Coordinate all Part 97 SIAPs and all DPs with ALPA. Coordinate with Allied Pilots Association (APA) for procedures at airports used by American Airlines. Coordinate helicopter procedures with Helicopter Association International (HAI). This coordination action is required to provide advance notice to the user organizations that a change to Part 97 is being initiated. These instrument procedures will be posted on the NFPO web site at: http://www.webavn.jccbi.gov/avnasp/acifp.asp. Civil aviation organizations that are requested to coordinate on these procedures will receive an E-mail alerting them of the procedure posting. Those receiving this notification then have 20 working days in which to review the procedures and respond to the indicated actions during the period that the procedure is being processed. Any substantive adverse user comments

during this period permit sufficient time to amend or withdraw the paperwork prior to publication. Evaluation and disposition of user comments are the responsibility of AVN-100; and all comments must be considered before the procedure is forwarded for publication. Valid user comments, that cannot be reasonably accommodated by AVN-100, should be referred to AFS-420 for resolution prior to submission of the procedure for publication (see also paragraph 421).

(1) Enter "X" in the appropriate aviation organization spaces.

(2) Designate additional organizations or offices if additional coordination is to be accomplished.

e. Flight Checked By. Enter the name of the airspace system inspection pilot (ASIP) who conducted the flight inspection and date flight inspection completed. The flight inspection procedures control form must be maintained with the procedure package. The 8260 series forms supporting IFPs require the signature of the flight inspection pilot or other authorized AVN-1 designated representative signifying flight inspection completion. If a flight inspection is NOT required, enter **"Flight inspection not required"** and the **name, title, and signature of the AVN-200 official** who makes that determination. Include the date of the most recent flight inspection of the SIAP. Use the word **"pending"** only if the procedure is submitted prior to flight check under Order 8260.26, Establishing and Scheduling Instrument Approach Procedures Effective Dates, or if publication is required on a specific charting cycle date. An entry in this block indicates the procedure:

(1) Was flight checked in accordance with applicable directives and standards. "Proposed" procedures forwarded under Order 8260.26, will be flight checked at a later date.

(2) Is approved for further processing and publication.

f. Submitted by. Enter the name, signature, company name, and date authorized by the non-governmental entity that designed the procedure. This block is only found on the Form 8260-7.

g. Developed By. Enter the name, branch, signature of the person responsible for developing the IFP, and the date developed. Authority to sign in this block is assigned to AVN-100 personnel certificated by AVN-1 as a procedure development specialist. The signature in this block certifies that:

(1) The developer used the most current and accurate data in developing the SIAP.

(2) The procedure was developed in accordance with appropriate policies, directives, standards, and criteria (see special instructions for Form 8260-7 in paragraph 872.

h. Approved By. Enter the name and signature of the AVN-100 Manager, or his/her designated representative, and the date signed. Signature in this block certifies that the procedure:

(1) Conforms to procedures development policies, standards, and criteria.

(2) Is approved for further processing and publication.

i. Changes and Reasons. The purpose of these entries is to keep charting agencies and coordinating offices advised of major procedural changes. The listing of changes should include all revisions (except clerical) and the reasons should contain sufficient details so that the cause for the procedural amendment will be clear to the reviewing offices.

j. Simultaneous NOTAM Cancellation. In the event the revision supports an FDC NOTAM which will be canceled on the effective date of the revision, the following Note must be added in the lower part of the REASONS block: **"This cancels FDC 2/0175."**

812. CANCELLATION OF INSTRUMENT APPROACH PROCEDURES.

Cancellation of instrument approach procedures must be accomplished on the same form number as required for documentation of the SIAP. All items on the front side of the forms must be left blank, except type of procedure and the CITY, STATE line. This line must duplicate the currently effective SIAP. The following notation must be typed in the NOTES section: **"Procedure canceled effective _____** (NFDC will fill in the date). On the reverse side of the form, complete the "coordinated with," "Developed by," and the "approved by" blocks. If applicable, enter in the lower portion of the REASONS block: **"Concurrent with VOR RWY 18, Original.**

813. MINOR REVISIONS TO SIAPs.

Minor changes to instrument approach procedures may be made by an abbreviated 8260-series form amendment. A T-NOTAM must be used to be followed by an abbreviated 8260-series form amendment. When processing an abbreviated 8260-series form, apply the following:

a. Increment the amendment number using an alphanumeric format; e.g. AMDT 3B.

b. Update the 8260-series form to reflect all previous P-NOTAM amendments not yet incorporated on the form.

c. A complete review of the procedure is not required; therefore, check "No" in the "All Affected Procedures Reviewed " box of the form

d. **Complete the "Changes" and "Reasons" blocks** of the form indicating the changes in the T-NOTAM as well as those of previous P-NOTAMs incorporated. Include cancellation of the T-NOTAM. Be specific in indicating the changes, e.g., 'MDA changed from 820 to 880,' and the reason, e.g., 'New obstacle found in final segment.'

e. **Enter "Routine"** as the required effective date.

f. Coordinate changes with appropriate organizations, as necessary.

814. PROCESSING.

When the AVN quality review is completed, the procedure must be forwarded directly to NFDC and AVN-500 for publication. Distribution must be in accordance with Table 8-1. Additionally, forward a copy to users specified in paragraph 811d. (Refer to paragraph 872d for Special procedure distribution channels.)

815. AVN REVIEW OF SIAPs AND CHARTS.

AVN-100 must review and check Forms 8260-3/4/5/10, and the associated aeronautical charts published by NACO for variations from information submitted for publication. If any variance or charting discrepancies are identified, see paragraph 223d for action to be taken.

816. NFPO ACTION.

a. Forms Routing. Table 8-1 provides easy routing reference for AVN-100 forms processing. Specific directive references are included for further guidance.

b. AVN-100 must process Army forms as required by Order 8260.15, U.S. Army Terminal Instrument Procedures Service.

c. AVN-100 must process U.S. Air Force procedures using FAA forms as required by Order 8260.32.

TABLE 8-1

FAA FORM	ATA-110	AFS-420	FPO	ARTCC	ATCT	ATA, ALPA APA. AOPA NBAA, HAI	NFPO Work File
8260-1 (Except Army)	AVN-100 originates. Send to AFS-400 thru AFS-420. All offices make their own copies. Completed original returned to AVN-100.						1
8260-1 (Cancellation)	AVN-100 or AFS-400 cancels through AFS-420, giving date and reason. Send copies to the same offices receiving approved waiver.						
8260-2 (except Army)	Orig		1	1	1	*	1
	* Regional AWO distributes to users.						
8260-3/4/5/ 15A/B/C 8260-10 (Con-tinuation)	Orig.		1	1	1	1	1
8260-10 (DF)	1		1	1	1 to DF control facility		Orig
8260-7	Distribute as specified in paragraph 444						
8260-9		If Special	1				Orig
8260-16	Orig		1	1		*	1
	* For Off-Airway routes. Regional FPO distributes to users.						
ARMY: 8260-1, 2/9/11/ 12/13/20/21/22/23 /24	AVN originates. Send package to USAASA or USAASDE. 1						1
USAF: 8260-2/9/11/12/ 13/20/21	1 Orig package to the Major Command TERPS Office (MAJCOM/DO)						1
7100-4	STAR package returned thru the Regional ATC (530)						1
Substitute Routes Letter Format	ORIG						1

817.-819. RESERVED.

SECTION 4. EXPANDED SERVICE VOLUME REQUEST

820. EXPANDED SERVICE VOLUME (ESV).

An ESV is processed electronically via the Expanded Service Volume Management System. The FAA Intranet web site is: http://172.27.27.38/esv/

821-829. RESERVED.

SECTION 5. FLIGHT PROCEDURES STANDARDS WAIVER, FAA FORM 8260-1

830. PREPARATION OF FAA FORM 8260-1, FLIGHT PROCEDURES STANDARDS WAIVER.

All waivers to Order 8260.3, U.S. Standard for Terminal Instrument Procedures (TERPS), and other TERPS related FAA directives, must be initiated by AVN-100, and forwarded to the Flight Technologies and Procedures Division, AFS-400, through the Flight Procedure Standards Branch, AFS-420. See figures 8-2 and 8-3 for sample Form 8260-1. Itemized instructions for completing Form 8260-1 are as follows:

a. Control Number : Flight Standards will enter a control number that will be used for tracking.

b. Item 1: Flight Procedure Identification. Enter the city and state, official airport name, and the flight procedure identification (excluding amendment number).

c. Item 2: Waiver Required and Applicable Standard. Identify clearly and accurately what standard is requested to be waived; e.g., **"Missed Approach Section 1 is not aligned with the Final Approach course. Order 8260.3B, Volume 3, paragraph 3.9.1."** Request only ONE waiver of standards on each form, and address only one standard per waiver request. When a procedure is amended, reprocessing of an existing waiver is not necessary unless the amendment directly impacts the basis for the waiver.

d. Item 3: Reason for Waiver. The reason for the waiver must be clear and concise. If the waiver for an existing procedure is being revised, the effective date of the original procedure must be included. Include full justification for the waiver; e.g., **"To avoid obstructions that would require raising the DA 180 feet."**

e. Item 4: Equivalent Level of Safety Provided. Complete this item in all cases with as many points as is germane to the equivalent level of safety. Clearly state the equivalent level of safety.

NOTE: The fact that the procedure has existed for a number of years or that the procedure conforms to CFRs is not considered to be sole justification for an equivalent level of safety.

f. Item 5: How Relocation or Additional Facilities Will Affect Waiver Requirement. Enter statements in this item to indicate consideration has been given to relocation, programming, or reprogramming action to negate the requirement of a waiver of standards. Insertion of NA (not applicable) in this item leaves a question as to whether any consideration has been given to this item.

g. Item 6: Coordination With User Organizations. Indicate the FAA offices and other organizations with which this waiver will be coordinated.

h. Item 7: Submitted By. The Manager, AVN-100, or his/her designated representative, must sign and date all waiver requests, and forward to AFS-420 for further action. The waiver package submitted to AFS-420 must include such technical data (sketches, maps, computations, supporting database information, documentation) as necessary for Flight Standards analysis and understanding of the situation. Packages submitted with insufficient supporting technical data are subject to return to the originating office, or may be held pending receipt of such information.

i. Item 8: Continuation. The top of the second page is a continuation sheet for additional information for items 2 through 6 on the first page of the form.

j. Item 9: AFS Action.

(1) The Flight Procedure Standards Branch, AFS-420, performs a technical analysis of the waiver request, coordinates internally as necessary, and forwards the waiver with accompanying technical data to the Flight Technologies and Procedures Division, AFS-400.

(2) AFS-400 indicates Washington Headquarters action, adds any appropriate comments, and returns the signed waiver package to AFS-420.

(3) AFS-420 retains a copy for file, provides the original completed waiver to AVN-100, and makes further distribution as necessary.

k. U. S. Army Waivers. AVN-100 completes Form 8260-1 per the instructions provided in this order, as supplemented by Order 8260.15, U. S. Army Technical Instrument Procedures Service. U. S. Army procedures requiring waivers, for joint civil/military use, are sent to AFS-420 per the provisions in paragraph 830h.

l. Cancellation of a waiver may be initiated by AVN-100 or by AFS-400. The initiating office must enter a signed statement to that effect, with the effective date and reason for cancellation. AFS-400 will distribute copies to the same organizations that received the approved waiver.

Example:

This waiver is canceled effective February 2, 2002.

TERPS Change 4 permits multiple DME fixes.

(Signature) _____

(Title, Office symbol)_____

831-839. RESERVED.

THIS PAGE INTENTIONALLY LEFT BLANK

US Department of Transportation
Federal Aviation Administration

FLIGHT PROCEDURES STANDARDS WAIVER

DATE: 09/28/2002

1. Flight Procedure Identification:
Phoenix, AZ (PHX)
Sky Harbor Intl.
BARGN ONE RNAV DEPARTURE

2. Waiver Required and Applicable Standard:

Fly-Over Waypoint Minimum Turn Distance. FAAO 8260.44, Paragraph 9.11.1, Table 2

3. Reason for Waiver *(Justification for nonstandard treatment)*:

Waiver required to evaluate minimum leg length when a (DF) leg is flown following a Fly-Over Waypoint .

Waypoint placement required for terrain avoidance and environmental concerns.

4. Equivalent Level of Safety Provided:

1. **Satisfactorily passes lead carrier (America West) flight simulator.**
2. **DF segment passed AFS-420 turn analysis program evaluation for minimum required leg length**
3. **Passed FAA flight inspection evaluation.**
4. **AFS-420 turn assessment attached.**

5. How Relocation or Additional Facilities Will Affect Waiver Requirement:

N/A - RNAV procedure

6. Coordination With User Organizations *(Specify)*:
AVN-160:_____
AVN-140_____

7. SUBMITTED BY

Office Identification:	Title:	Signature:
AVN-100	**Manager, National Flight Procedures Office**	**John Q. Smith**

FAA FORM 8260 - 1 / May 2002 (computer generated)

Figure 8-1

8. CONTINUATION
Comments:

9. AFS ACTION		
	☒	Approved
		Disapproved
		Not Required

Comments:

Approved based on the equivalent level of safety provided in Block 4.

Date:	Routing Symbol:	Signature:
10/29/2002	**AFS-400**	**JAMES T. JONES, Manager** **Flight Technologies and Procedures Division**

Figure 8-2

SECTION 6. RADIO FIX AND HOLDING DATA RECORD FAA FORM 8260-2

840. INTRODUCTION.

a. General. All civil and military named fixes and holding patterns must be documented on Form 8260-2. Named facilities do not require this documentation unless holding is established. (see paragraph 872b(1)). Form 8260-2 may be initiated by the National Flight Procedures Office (NFPO), military organizations, or approved non-Federal procedure developers. Form 8260-2 action can be initiated by air traffic facilities using the 8260-2 worksheet (see appendix 3). The worksheet is submitted to the regional air traffic office for coordination with the Regional Airspace and Procedures Team (RAPT). When initiated by military organizations, the forms are coordinated with the parent FAA air traffic facility and then forwarded to AVN-160 for processing. WHEN INITIATED BY NFPO, THE INFORMATION MUST BE COORDINATED WITH THE APPROPRIATE AIR TRAFFIC FACILITIES. The forms must be distributed in accordance with Table 8-1.

b. Entries. All radial/course/bearing entries are magnetic unless otherwise noted. Distances less than one mile must have a zero before the decimal.

c. Storage. All domestic and certain foreign named fixes and holding requirements are entered into NFDC's computer for permanent storage, and are published in Order 7350.7, Location Identifiers.

d. Fix Name Change. A fix name change requires a revised 8260-2. Annotate in the REMARKS section what the name change is, e.g., "NAME CHANGED FROM LESLI TO WALLS." Fix name changes must be kept to an absolute minimum as Instrument Flight Procedures may require amendment as a result.

NOTE: A name change for fixes used on procedures contained in the National Flight Database (NFD) will require the procedure to be amended to reflect the changed fix name.

841. PREPARATION OF FAA FORM 8260-2.

a. AIRSPACE DOCKET NUMBER. Enter the docket number when the request is associated with an airspace action. If no docket number, leave blank. A docket number is required when a compulsory reporting point is established, modified, or canceled.

b. NAME. Enter the name of the fix. Do NOT enter "INT" or "WP" after the name of the fix. See paragraphs 264 and 841d(2)(a)-(d). When an RNAV waypoint is collocated with another type of fix, use the same name for both.

(1) DESIGNATOR. When the fix is a navigation facility, use the facility name and include the facility type.

EXAMPLES: DENVER VORTAC
JACKSON VOR
RHONE OM
AVON NDB
ARUBA LOM
BONLI FM

(2) FIX TYPE. Enter the fix type(s) in the appropriate box(es). Check all appropriate boxes for the various uses of the fix. If the fix is a facility only, no entry is required in Fix Type box.

c. LOCATION. Enter the two-letter identifier of the state and country or territory in which the fix is located. The state is left blank if the country is other than the U.S. For offshore fixes in the U.S., name of the nearest state must be used. If the fix is outside U. S. Domestic Airspace, use OA for Offshore Atlantic, OG for Offshore Gulf of Mexico, or OP for Offshore Pacific.

d. BLOCK 1. RADIO FIX.

(1) TYPE OF ACTION. Enter in the appropriate box the type of action being taken. This is applicable to Block 1 only, and NOT to be confused with Block 2, HOLDING.

***NOTE**: FIX CANCELLATION. When a fix is cancelled, a copy of the current 8260-2 will be generated. TYPE OF ACTION will have CANCEL checked. Complete the AVN APPROVAL line for the individual approving the cancellation*

***NOTE**: Instrument Procedure Cancellation. Whenever an instrument procedure is cancelled, process a revision or cancellation, as necessary, of 8260-2s for fixes associated with the procedure.*

(2) FACILITY BLOCKS. En route: Where a crossing radial/bearing establishes a fix along an airway,

list the on-course facility as Facility 1, and the off-course facility as Facility 2. Where a fix is established at the intersection of two or more airways, list the source facility farthest from the fix as Facility 1. When more than three facilities are needed, a new page will be used as necessary to list all required facilities. Document radar reference point after any facilities used for a fix. RNAV waypoints used for en route purposes only, leave blank. **Terminal:** If the fix is an intersection, list the facility providing positive course guidance as Facility 1, and the crossing course facility as Facility 2. If the fix is DME, list the DME source, if other than Facility 1, as Facility 2. When more than three facilities are needed, a new page will be used as necessary to list all required facilities. Document radar reference points after any facilities used for a fix. Document waypoint reference points after any facilities and/or radar reference points used for a fix. For a VOR/DME RNAV waypoint, list the reference facility as Facility 1. For RNAV waypoints with multiple uses, the waypoint information for when it was first established will be listed. Terminal RNAV waypoints not used on instrument flight procedures, leave blank.

(a) NAME. Enter the name and identifier (in parenthesis) of navigational facility, the airport ICAO identifier and runway (R and two digit number, plus suffix if applicable), or reference waypoint name. (Fixes used as a Missed Approach Point (MAP) on Copter approaches not aligned to a runway; if the MAP is greater than 10,500 feet from the landing area, enter **"POINT IN SPACE;"** if the MAP is 10,500 feet or less from the landing area, enter the heliport ICAO identifier.) If the heliport does not have an assigned ICAO identifier, enter **"HRP,"** and annotate in the REMARKS section the heliport name and heliport reference point (HRP) coordinates, e.g., **Regional Medical Center 324511.45N-1020425.82W.**

EXAMPLE: KANSAS CITY (MCI)
KDSM
KLAX R25L
BOSOX
POINT IN SPACE
HRP

(b) CLASS/TYPE. For each facility used to form the fix, enter the Standard Service Volume (SSV) class. VOR, VORTAC, VOR/DME, TACAN, (T, L, H), NDB (HH, H, MH), other facilities leave CLASS blank. Enter facility type. For a radar or waypoint reference point, leave blank.

EXAMPLE: H-VORTAC
L-VOR
MH-NDB
LOM

(c) RADIAL/COURSE/BEARING. Enter the radial, course, or bearing from each facility used to form the fix. Enter the magnetic value, followed by the true value in parenthesis. Localizer true course is based on the signal outbound from the facility. Localizer magnetic course entries are in compass points using the magnetic course inbound (see figure 8-2). Enter the bearing from each radar or waypoint reference point in parenthesis using the true value only. If radial/course/bearing is not defined, leave blank. Enter values to the nearest hundredth of a degree.

EXAMPLE: 123.67 (120.67)
NW CRS (324.45)
(032.11)

(d) DME DISTANCE. Enter values to the nearest hundredth of a mile. Compute terminal courses and distances based on the same mileage figure. EXCEPTION: When the fix being defined is a Precision Final Approach Fix (PFAF), enter the distance (feet from LTP/FTP) in parenthesis adjacent to the nautical mile (NM) value. The NM figure is determined by dividing the distance in feet by 6076.11548.

EXAMPLE: (28,956.03) 4.77

1. DME. Enter the distance from the source facility to be charted. If the facility providing DME INFORMATION IS NOT COLLOCATED WITH THE FACILITY PROVIDING COURSE GUIDANCE, LIST BOTH FACILITIES (SEE PARAGRAPH 805G(4)(G)).

2. MLS. Enter the DME distance

3 VOR/DME RNAV. Enter the distance from the reference facility.

4. WAYPOINT. Enter the distance from the reference point.

5. RADAR. Enter the distance from the runway.

(e) MRA/MAA. See also paragraphs 267 and 269. The Minimum Reception Altitude (MRA) is

usually based on electronic signal strength determined by flight inspection of the navigational facility. The Maximum Authorized Altitude (MAA) is the highest altitude authorized for use of the fix. The developer must consider all possible uses of the fix, request flight inspection of the lowest authorized altitude, and ensure procedure design is compatible with any limitations imposed. MRAs/MAAs assigned must be consistent with signal strength, facility service volume, air traffic requirements, air/ground communications, and airspace structure. For fixes located inside the FAF, establish an MRA 100 feet below the lowest published procedural altitude at the fix. Values are entered in hundreds of feet, e.g. 8700/45000 must be entered as 87/450; 960 would be entered as 9.6.

(f) DISTANCE FROM FACILITY. When the fix is an intersection, enter the distance from the governing facility to the nearest mile. The definition of the governing facility is contained in TERPS Volume 1, paragraph 1760. When the fix is not an intersection, leave **blank**.

(g) LEAST DIVERGENCE ANGLE. Enter the smallest angle formed by the radials/ courses/bearings of the facilities used to form the fix. Enter the true value divergence angle in whole degrees. When the fix is formed by more than two facilities, the least angle may not meet criteria. Determine whether the fix is satisfactory by examining how it is used. Consider the flight path and what course indications the pilot will actually use. When the divergence angle is less than 30 degrees (45 degrees for holding), include a note in the remarks section indicating the terminal fix criteria used, e.g. TERPS Volume 1, paragraph 287(c). When the fix is not an intersection, leave **blank**.

(h) AIR/GROUND COMMUNICATIONS. Where communications are required at a fix, enter the air traffic facility(ies) providing air/ground communications. Check the appropriate frequency range box(es). Enter the lowest altitude at which satisfactory communications are provided at the fix. If the communications altitude is higher than the fix MRA, holding altitudes and/or use of the fix may be restricted. Flight inspection and ESV forms provide a source for this data.

(i) MRA OF OTHER FACILITIES AT THIS FIX. See also paragraphs 267 and 269. Enter the facility identification, type and class, radial, course, or bearing , DME, and the MRA/MAA of other facilities whose radials, courses, or bearings intersect this fix and could be used as substitutes during the shutdown of the primary facility or for other purposes. Data entered in these blocks must be to the same order of accuracy as data entered in Block 1A. Leave "CHECKED BY" and "DATE" **blank**.

(j) AUTHORIZED USE OF THIS FIX. Enter the use of the fix in the appropriate boxes. Check low boxes for fix use below 18000, high for 18000 and above. If the fix is compulsory, see also paragraph 841a. If an MCA or MRA is established at the fix, check the FLAG REQUIRED box and enter the flag note in the space provided. The flag note box provided on this form is used for MCA or MRA notes at the fix. Any change in an en route MCA or MRA must be submitted as an amendment to the airway on Form 8260-16.

(k) RADIO FIX IS. Check the approved, disapproved, or restricted box. Check the restricted box when the fix requires an MRA or MCA, or its use is limited to an individual operator on a Special SIAP or non-Part 95 routing. Military-only fixes or fixes associated with Special SIAPs are restricted and must include an operational note in the REMARKS section; e.g. "RESTRICTED – ASPEN AIRWAYS." When the restricted box is checked, the approved and disapproved boxes are left blank.

e. BLOCK 2. HOLDING.

(1) TYPE OF ACTION. Enter the type of action being taken in the appropriate box. This is applicable to Block 2 only, and NOT to be confused with Block 1, RADIO FIX. When no action is being taken, leave blank on originals and check "NO CHANGE" on revisions.

(a) HOLDING CANCELLATION. Revise the 8260-2 when holding pattern cancellations are necessary. In Block 2, HOLDING, check the CANCEL box and in Block 2D, check the DISAPPROVED box. Revise the 8260-2 when more than one holding pattern is established and you wish to cancel an individual holding pattern and retain the other(s). In this case, check the MODIFY box in Block 2, HOLDING, and identify the modification in Block 10, REASON FOR REVISION.

(b) HOLDING REQUIRED. When a specific holding pattern is not required, leave blank. If more than three holding patterns are required and each is described individually, a new page will be generated with the patterns numerically sequenced.

1 DIRECTION. Enter the holding direction based on magnetic inbound course (see figure 8-2).

2 IDENT. If holding is based on ground navigational facility, enter the facility identification of the facility providing course guidance. If RNAV, leave IDENT blank.

3 TYPE . Enter the type of facility. If RNAV, enter "WP".

4 RAD/CRS/BRG. Enter the radial/ course/bearing in hundredths of a degree from the facility or waypoint on which holding is based. If the holding facility is a localizer, enter the magnetic directional course, i.e. , W CRS.

5 CRS INBOUND. Enter the course inbound in hundredths of a degree.

6 TURN (L OR R). Enter the direction of turn.

7 TIME/DME OUTBOUND. Enter the time and/or longest DME leg length outbound from the fix. If RNAV, enter only longest leg length in NM.

(c) HOLDING ALTITUDES. Enter the minimum and maximum holding altitudes authorized for the aircraft speed categories used. Authorized altitudes must be no lower than the lowest altitude requested by ATC. Evaluate up to the maximum altitude operationally requested. See Order 7130.3, Holding Pattern Criteria, for appropriate holding speeds by altitude. The minimum and maximum holding altitudes for speed categories should be consistent, if feasible. When no holding is specified, leave blank. Enter altitudes in hundreds of feet; e.g., 8700/45000 is entered as 87/450.

(d) REASON FOR NONSTANDARD HOLDING. When holding with left turns, state the reason; e.g., TERRAIN. If standard, leave **blank**.

(e) HOLDING IS. Check the appropriate box.

1 Unplanned holding at en route fixes may be expected on airway or route radials, courses, or bearings. If the fix is a facility, unplanned holding could be on any radial or bearing. Holding approval for en route fixes indicates approval of unplanned holding.

2 When unplanned holding is not recommended, holding should be disapproved or restricted. When planned or unplanned holding is restricted, add an appropriate note in the REMARKS section.

EXAMPLE:
HOLDING LIMITED TO ESTABLISHED PATTERN(S).
UNPLANNED HOLDING NA 090 CW 220.
UNPLANNED HOLDING NA ON R-120 CW R-272.
UNPLANNED HOLDING AUTHORIZED AT OR ABOVE 5000.

3. En route fixes which also serve as missed approach clearance limits must permit holding and en route flight. If holding is not specified, assure that the aircraft can hold on the missed approach course leading to the fix and document the controlling obstacle in Block 7. Where missed approach is direct to the clearance limit, a holding pattern must be established.

f. BLOCK 3. REMARKS. The foregoing instructions contain several uses for this section. Additional uses are as follows:

(1) FIX USE. List the uses of the fix when a specific facility or holding pattern needs to be charted for a fix use, enter the Facility # and/or Pattern # after the fix use in parenthesis.

(a) EN ROUTE: List all airways and routes that use the fix.

EXAMPLE:
EN ROUTE: V3,V76, J134
EN ROUTE: V3 (PAT 2), V56, V374
EN ROUTE: J22 (FAC 1)

(b) TERMINAL: List all terminal procedures that use the fix, include all approaches, departures, and STARs. List by Procedure Type, City/State (Country, if outside U.S.) (include airport name if needed for clarity), Procedure Name, and any specific Facilities or Patterns needed in parenthesis.

EXAMPLE:
SIAP: CARIBOU, ME, VOR RWY 19
CARIBOU, ME, RNAV (GPS) RWY 19
SIAP: NEW YORK, NY, LA GUARDIA, ILS RWY 4 (FAC 1, 2, PAT 2)
DP: HAVEN, CT, BRIDGEHAVEN DP

STAR: PROVIDENCE, RI, GREEN ARRIVAL FAC 3)

(c) OTHER. List all uses for the fix not associated with instrument flight procedures.

EXAMPLE:
OTHER: ATC REPORTING POINT
OTHER: ATC OFFSHORE REPORTING POINT
OTHER: SUB-ROUTE OF V44

(2) LATITUDE/LONGITUDE. Enter the fix latitude and longitude in the lower left corner of the REMARKS section. Compute the coordinates using the primary means of identifying the fix. Enter to the hundredth of a second. Include the compass point of the latitude and longitude. En route fixes must be calculated using the true courses (to the hundredth of a degree) between facilities making up the airway/route segment. If the fix is also used in a terminal procedure, then terminal priorities must prevail.

EXAMPLE:
482921.83N / 1064810.92W

(a) If the fix can be formed in more than one manner, show the facilities used to calculate the coordinates given, and record only one set of coordinates on the form.

(b) Facilities (OM/MM/IM and LOM/LMM/LIM) used as fixes on IAPs are compatible with database referenced navigation systems only when located on the final approach course (FAC) of the NAVAID providing FAC guidance. To ensure compatibility and consistency, use actual coordinates only when the facility resides on the actual FAC. Otherwise, whenever the actual location of the facility is within the commissioned width of the FAC facility, establish marker/locator coordinates where the marker major axis intersects the actual FAC. Where the actual location of the facility is outside the commissioned width of the actual FAC, establish a separate suitable intersection or fix on the actual FAC. In situations where IAPs are established to adjacent parallel runways and the facility is located within the commissioned FAC width for both runways, use the marker/locator on one IAP, and establish a separate fix for the other IAP. Use the actual coordinates of the NDB (LOM/LMM/LIM) for NDB approach procedures. In those instances where the coordinates on the -2 reflect the intersection of the marker major axis and the actual FAC, indicate such in remarks.

EXAMPLE:
"Coordinates reflect location on loc/az centerline abeam the [Facility Name LOM or OM]. Actual facility location is 123456.78N/0123456.78W."

(3) MINIMUM TURNING ALTITUDE (MTA). When an MTA is required by TERPS Volume 1, paragraph 1714(c), enter the MTA in the REMARKS section.

EXAMPLE:
MINIMUM TURNING ALTITUDE(S): AIRCRAFT PROCEEDING: MLD V465 JAC V330 IDA, OR MLD V465 JAC V520 DBS, OR IDA V330 JAC V520 DBS, MUST MAINTAIN 15800 OR HIGHER UNTIL ESTABLISHED ON CENTERLINE OF V330 OR V520 W BOUND.

(4) DISPLACED THRESHOLD. If a facility used for fix make-up is a runway and the runway has a displaced threshold, list the displaced threshold coordinates.

EXAMPLE:
KBOS R04R DISPLACE THRESHOLD COORDINATES: 422114.55N - 0710037.27W

g. BLOCK 4. AIR TRAFFIC REQUESTS APPROVAL OF REFERENCED FIX FOR:

(1) NAME. Enter the name of the fix. (see paragraph 841b). This block will assist in correlating front and backsides of the form.

(2) REPORTING POINT. Indicate whether a compulsory or an on-request reporting point is required. Indicate the airspace structure for which the fix is desired (see also paragraph 841a).

(3) HOLDING. Enter the minimum and maximum holding altitudes authorized for the aircraft speed categories used. Enter the template number of the holding pattern required for the highest altitude authorized in low and high strata for each speed category and for each holding pattern. When no holding is specified, leave blank. For VOR/DME RNAV, the distance from the waypoint to the reference facility must be applied as the "fix-to-NAVAID distance" in table 2 of Order 7130.3, Holding Pattern Criteria

(4) HOLDING AREAS. Check the appropriate box to indicate whether all holding is completely

within controlled airspace and clear of restricted and/or warning areas. When holding is not completely within controlled airspace or clear of restricted and/or warning areas, an entry must be made in the REMARKS section indicating the action required by ATC. When no holding is specified, leave **blank**.

EXAMPLE:
PRIOR COORDINATION REQUIRED WITH CONTROLLING AGENCY FOR HOLDING OVER R-5503A/B AND/OR BRUSH CREEK MOA.

h. BLOCK 5. CHART PUBLICATION. Check the appropriate box to indicate whether charting is required or not required. For a "special" SIAP, check "NOT REQUIRED." If charting is no longer required, leave the "REQUIRED" block blank. When charting is required, check the appropriate box(es) indicating the fix and holding charting requirements for: AREA – Area Chart; DP – Departure Procedure/SID; STAR – Standard Terminal Arrival; JAL – Joint Approach Landing; AL – Approach Landing; CONTROLLER – Controller Chart; E/R LOW – En route Low Chart; E/R HIGH – En route High Chart. Use the JAL column for all military SIAP charting, low and high.

i. BLOCK 6. ATC COORDINATION. Enter the date, air traffic facility ID and type, and name of the ATC individual who initiated/coordinated the fix.

j. BLOCK 7. CONTROLLING OBSTRUCTIONS.

(1) Documentation.

(a) SPEED. Enter the highest aircraft speed category used for the pattern.

EXAMPLE: 230

(b) OBSTRUCTION. Enter the description of the controlling obstruction, and the obstruction identifier if applicable in parenthesis.

EXAMPLE: TOWER (KORD0045)

(c) COORDINATES. Enter the latitude and longitude, with compass points, of the obstruction to the nearest hundredth of a second.

EXAMPLE: 573129.97N/0701658.77W

(d) ELEVATION. Enter the MSL elevation of the obstruction to the nearest foot and the applicable accuracy code (if used) in parenthesis.

(e) TEMPLATE. Enter the pattern template number corresponding to the minimum holding altitude for the pattern.

EXAMPLE: P-4

(f) DETERMINATION. Enter the method used to determine the controlling obstruction.

EXAMPLE: IAPA AND MAP STUDY

(2) Holding Pattern Analysis. Analyze holding patterns incrementally for all altitudes requested by ATC and for all speed categories. Except for COPTER approaches, do NOT use less than pattern template number 4. Apply appropriate obstacle clearance to all obstacles within each template area. Some time may be saved by initially evaluating the patterns for the highest speed group. If the same controlling obstruction or minimum holding altitude results, document the obstruction and the associated smaller pattern template number; the evaluation is then complete. If the minimum holding altitudes differ, a more detailed incremental analysis is necessary.

(3) Unusable Holding Altitude. Where unusable holding altitudes are found, document the controlling obstruction and associated pattern template number for first usable holding altitude above and/or below the unusable altitude(s), and restrict holding accordingly. Restrict holding in the REMARKS section.

EXAMPLE:
HOLDING RESTRICTED TO 5,000′
HOLDING NOT AUTHORIZED ABOVE 6,000′
HOLDING NOT AUTHORIZED FROM 2,100′ THROUGH 3,900' OR FROM 6,100′ THROUGH 8,000′
HOLDING NOT AUTHORIZED BELOW 5,000′

(4) Climb-In-Hold. Evaluate climb-in-hold as appropriate, IAW Order 7130.3, paragraph 2-28. Document the evaluation in the REMARKS section. Include the aircraft speed category used in parenthesis.

NOTE: If other than 310 Knots (200/230 Knots for holding patterns restricted to 175 KIAS) is used, the procedure must be annotated with the maximum airspeed allowed to conduct a climb-in-holding (see paragraph 856f).

EXAMPLE:
CLIMB-IN-HOLD EVALUATED (310K)

k. BLOCK 8. FLIGHT INSPECTION. Enter AVN-200 and the verification date. The word "PENDING" is appropriate for facility rotations for which hard dates are established; and may be used for any fix on original/amended IAPs forwarded under the provisions of Order 8260.26, Any changes required as a result of flight inspection findings would necessitate a revised 8260-2. Leave **blank** for oceanic waypoints identified by long-range navigation equipment.

l. BLOCK 9. REVISION RECORD. Enter the revision number. The revision date will be the date of AVN-100 APPROVAL. Enter the superseded revision number and date. When the fix is an original, enter "ORIG" in the REVISION NO. Block.

m. BLOCK 10. REASON FOR REVISION. List the reason(s) for the revision. Make "concurrent with" entries if needed.

EXAMPLE:
ADDED FACILITY 3 TO FIX MAKE-UP
RAISED PATTERN 4 MINIMUM HOLDING
ALTITUDE FROM 3,000′ TO 4,000′
CONCURRENT WITH JACKSON HOLE, WY,
VOR/DME RWY 36, AMDT 3

n. BLOCK 11. INITIATED BY. For AVN developed fixes, enter the date, branch, and name of the specialist. For all other developed fixes, enter the date organization/company, and name of the individual requesting the fix.

o. BLOCK 12. DEVELOPED BY. Enter the date, office, and name of the AVN specialist that completed or reviewed the fix.

p. BLOCK 13. AVN APPROVAL. Enter the date, branch, name, and signature of the AVN-100 Branch Manager, or his/her delegated representative, approving the fix.

q. BLOCK 14. DISTRIBUTION.

(1) AVN-100 must distribute the approved 8260-2s for instrument procedure fixes, including military fixes as defined in table 8-1.

(2) Enter the office symbol or abbreviation in the appropriate boxes.

(3) For U.S. Army fixes, distribute 8260-2s IAW Order 8260.15, United States Army Terminal Instrument Procedures Service.

(4) AVN-100 will send the original 8260-2s on Specials to ATA-110 when notified that the Special has been approved by AFS-420.

842-849. RESERVED.

SECTION 7. COMPLETION OF FAA FORMS 8260-3/5

850. GENERAL.

This section contains information applicable to the completion of Forms 8260-3 and 8260-5. Certain information contained herein is also applicable to Forms 8260-4, 8260-7, and 8260-10, which is covered in the succeeding section. Guidance is referenced to each separate area of the forms.

851. TERMINAL ROUTES.

The information described in the Terminal Route section along with data entered on line 1 or 2 is used to develop the planview of the instrument approach chart.

a. From-To columns. List routes from fix to fix. Establish terminal routes that require a course reversal direct to the fix or facility from which the course reversal is authorized. Signify dual-use fixes (e.g., where hold-in-lieu-of-PT is established at the FAF or IF) as (**FAF/IAF)** or (**IF/IAF).**

(1) Enter IAF designations "(IAF)" in the "FROM" column after each fix satisfying the requirements of the parenthetical initial approach fix (see paragraphs 805i and j).

(2) Enter intermediate fix designator "(IF)" in the "FROM" column after the fix satisfying the requirements of the parenthetical intermediate fix (see paragraph 805j(4)).

(3) Enter NoPT in the "TO" column for initial segments that permit elimination of the procedure turn. Designate the intermediate segment NoPT only if necessary to clarify the procedure. Do NOT designate as NoPT a segment after a course reversal fix (see paragraph 805g(2)).

(4) Enter CW for clockwise or **CCW** for counter-clockwise in the "FROM" column for arc segments. When entered, this information must precede the "(IAF)" as applicable. Enter the name of the fix to which an arc segment connects in the "TO" column.

(5) Describe feeder or initial routes based on dogleg segments as fix-to-fix. For a dogleg to a fix on the extended final approach course (FAC), enter the heading and FAC in the course/distance column (see paragraph 851b(3). Specify each segment on a separate line. Establish common initial segment altitudes. Where not possible, establish separate procedures. The DR initial is one segment.

(6) For RNAV (GPS) IAPs, document the MAP in the "FROM" column; e.g., **RW18L (MAP).**

(7) For RNAV (GPS) IAPs, document the RNAV leg type, whether a WP is fly-by (FB) or fly-over (FO), and waypoint description code(s) for approach as well as missed approach segments, in the "TO" column, as appropriate; e.g., **UNAVY (NOPT) (TF) (FB) (43A);** and for missed approach, **ECCHO (DF) (FO) (43M).** Additionally, waypoint description code(s) must be listed in the "FROM" column. Establish the missed approach holding WP (clearance limit) as a FO waypoint.

NOTE: Waypoint description codes are defined by specifying a column number and Alpha character as defined in appendix 12. There may b e more than one waypoint description code associated with a fix. ARINC Specification 424, *Navigation System Database, is the source of this information.*

b. Course/Distance Column. Specify the course and distance for each route segment, except for RNAV DF legs. Enter the actual magnetic course to the hundredth of a degree, and distance to the hundredth of a mile. NACO will round for publication.

(1) Where course guidance is apparent (fix to facility, facility to a fix, or facility to facility):

090.17/10.03.

(2) Where course guidance must be specified (fix-to-fix): Specify NDB bearings "FROM" the facility.

090.44/7.12 (I-ABC).
090.11/8.20 (ABC R-270).
090.34/10.56 (XXX Brg 090).
251.33/7.89 (M-AVE).

(3) Where there is a DR route defined from fix to fix via two segments (dogleg), and there is no altitude change between segments, the course, distance, and guidance must be identified for each segment in one single entry. Establish a CNF at the intersection of the heading leg and the next segment. Document the CNF on Form 8260-2 and provide charting instructions in the associated Additional Flight Data section (see paragraph 857v.

130.49/7.10 (ABC R-130) & 185.01/4.33 (XYZ R-185).
005.21/3.60 (Hdg) & 296.36/4.82 (I-MSP).
130.28/4.12 (Hdg) & 180.18/7.45 (ABC R-360).

(4) Enter the DME arc used in an arc segment: **14.00 DME Arc**.

(5) When a lead radial or bearing is required, enter the data in parentheses immediately below the course and distance data in the following manner:

(ABC LR-300).
(ABC LBRG-300).

c. ALT Column. Enter the altitude authorized for the route, except for an RNAV (GPS) missed approach segment from the MAP to a turn WP. When the routing requires a course reversal, the altitude authorized must not be lower than the course reversal altitude. The altitude authorized for any terminal route must be no lower than the altitude authorized for succeeding segments. Where more than one segment joins at a common fix, a common altitude must be selected. Where a localizer segment fix minimum altitude differs from that required for ILS, enter the ILS minimum altitude. Directly below this value, enter the LOC minimum altitude followed by the same attention symbol used in paragraph 852d(1) so that both plan and profile views are identically annotated. When mandatory or maximum altitudes are an operational necessity, document the limitations in Additional Flight Data (see paragraph 857t). A standardized 3-degree descent angle must be used where feasible.

852. LINES 1 THROUGH 8.

a. Line 1.

(1) Enter procedure turn (PT) side of course as left or right of the outbound course; i.e., the large side of the template. Enter the outbound course to the hundredths of a degree, procedure turn altitude, procedure turn distance, and name of fix from which the procedure turn is authorized as follows:

PT L side of CRS 018.13 outbound, 2300 ft. within 10 mi. of MELIS INT (IAF).

(2) When an obstacle in the PT entry zone precludes early descent to PT altitude, enter the altitude restriction in Additional Flight Data as **"Chart (altitude) prior to (PT Fix) in profile."**

(3) Enter "NA" following "PT" when a course reversal is not authorized.

(4) Leave line 1 blank where hold-in-lieu-of-PT or a teardrop course reversal maneuver is established.

b. Line 2.

(1) Where a SIAP requires a teardrop course reversal maneuver, enter the data in accordance with the following examples:

Collocated facility:
Teardrop R-160 outbound, R-355 inbound, 4,300 ft. within 15 mi. of ABC VORTAC (IAF).

Non-collocated facility:
Teardrop R-160 (ABC VORTAC)(IAF) outbound to NIXON/19.00 DME, 355.00 (I-XYZ) inbound, 3,000 ft. to KENNY OM/INT.

(2) Where a SIAP requires a holding pattern in-lieu-of-PT (see TERPS Volume 1, paragraph 234e), establish the direction of holding based on the inbound course as shown in figure 8-2. Enter holding data in accordance with the following example:

Hold SE OMEGA LOM, RT, 313.09 inbound, 1600 ft. in lieu of PT (IAF).

Magnetic Course (Inbound)	Holding Pattern Direction (based on inbound course)
338-022	S
023-067	SW
068-112	W
113-157	NW
158-202	N
203-247	NE
248-292	E
293-337	SE

Figure 8-2. Holding Pattern Directions

(3) On procedures that do not authorize a PT or holding pattern, enter the fix/facility from which the profile is to start. The profile must include the intermediate fix. If required for clarity, the profile may be extended to include all fixes established on the final or intermediate course.

Profile starts at STING.

c. Line 3.

(1) Enter the final approach course (FAC) on all procedures. Enter the exact electronic course to a hundredth of a degree. NACO will chart to the nearest whole radial/course for publication. The FAC is determined as follows:

(a) ILS, MLS, LOC, SDF, and LDA procedures - enter the official course alignment based on antenna location and orientation.

(b) RNAV procedures - enter the course established by NFPO computation.

(c) NDB, VOR, and TACAN procedures - enter the computed magnetic radial/course/bearing or reciprocal unless flight inspection establishes otherwise (see paragraph 857i). If other than the computed value, enter both values in the Remarks section of the Form 8260-9 (see paragraph 860c(8)).

(2) Enter FAF where applicable. Enter a FAF for all procedures, except those procedures without a FAF that use on-airport facilities, or ILS/MLS procedures that do not authorize LOC/AZ-only or circling. On RNAV forms, enter the named FAF.

(3) Enter the distance from the FAF to the MAP in miles and hundredths. For non-RNAV procedures, enter a dash when the time/distance table is not required for determination of the MAP, such as when the MAP is a facility or fix. Leave **blank** for on-airport NoFAF SIAPs. All RNAV procedures must have the FAF to MAP distance specified (a time/distance table will not be published on RNAV procedures).

NOTE: It may be necessary to define MAP with a time/distance table when criteria do not permit use of DME to define the MAP (e.g., DME satisfactory to define FAF but MAP signal source exceeds 23° angular divergence).

(4) Enter the distance from the FAF to the runway landing threshold, or abeam, if straight-in minimums are authorized, to the nearest hundredth of a mile. Leave **blank** for circling-only and on-airport NoFAF SIAPs, and COPTER point-in-space approaches.

d. Line 4. Enter fixes and minimum altitudes that are to be depicted on the profile view. On procedures that do not authorize a procedure turn or holding pattern, the facility or fix designated as the start of the profile in line 2 must be the first fix/facility entered on line 4 (see paragraph 805j(3)). Where radar vectors are required for procedure entry, ensure the relevant minimum altitude shown is not lower than the MVA at the IF.

(1) Fix altitudes established on ILS for LOC-only use should be coincident with the glide slope when possible. Where the fix altitude is not within 20 feet of the glide slope, annotate it for LOC use as follows:

MIN ALT CAROL 1600*
*LOC only

NOTE: This notation is not used when the nonprecision FAF altitude is the same as GS intercept altitude.

(2) Enter all fixes and minimum altitudes after completion of procedure turn, including any fixes associated with the procedure turn or intermediate segment, and including t e FAF and any final stepdown fixes. Enter the IAF and minimum altitude when required for obstruction clearance in the PT entry zone (see paragraph 852b).

NOTE: Do not enter a fix on line 4 that is positioned on the profile prior to the procedure turn or holding point unless the fix is required for obstacle clearance or noise abatement after completion of the PT.

(3) Make no entry on line 4 for on-airport facilities with a single set of minimums and no stepdown fix, except as noted in paragraph 852d(2) above, since the minimum altitude over the facility is determined by the MDA.

(4) For procedures with a FAF, an entry on line 4 is required for the FAF and the stepdown fix(es), if established.

(5) For procedures with a stepdown fix, enter the lowest MDA at the stepdown fix authorized for aircraft that cannot receive the stepdown fix. If an MDA increase is required when a remote altimeter setting is used, the stepdown fix should be annotated to reflect the necessary altitude adjustment as follows:

MIN ALT: PAULA 1420*
***1540 when using (location) altimeter setting.**

e. Line 5. (Form 8260-3). Enter distance in miles and hundredths to the threshold from the FAF/PFAF or OM and MM. On Category II and III ILS procedures, enter distance in feet to the threshold from the IM and 100 HAT points; enter a **dash** if not appropriate. On Categories I, II, III, enter distance in feet from the threshold to a point abeam the GS antenna (for ILS), and abeam the elevation antenna (for MLS). For RNAV procedures, leave blank.

f. Line 6. (Form 8260-3).

(1) Enter minimum GS/GP intercept altitude, rounded to the next higher 100-foot increment.

(2) If a fix or facility is located on the final approach course **between** the precision FAF (GS/GP intercept) and the nonprecision FAF, enter the name of the fix or facility and the GS/GP elevation in feet. Where nonprecision minimums are not published, establish a fix and associated GS/GP altitude. For RNAV procedures, leave blank.

(3) Enter the altitude of the GS/GP in feet at the OM, MM, and the IM. If not installed, enter a **dash.** For RNAV procedures, leave blank.

NOTE: GS/GP altitude computations contained in TERPS Volume 3 include earth curvature (EC) values.

g. Line 7. (Form 8260-3).

(1) Enter the computed VNAV angle, **LPV angle, or the commissioned ILS/MLS/TLS angle** (as appropriate) to nearest hundredth of a degree. This angle must be used to make calculations entered in lines 5, 6, and 7.

(2) Enter the threshold crossing height (TCH) to the nearest tenth (.1) of a foot**.** For facilities flight inspected under Order 8240.47, the RDH is the TCH, unless ARDH is used. When a threshold is displaced, enter the TCH over the displaced threshold, but do not identify it as such. If the TCH over the displaced threshold is below the minimum value specified in TERPS Volume 1, table 18, enter the TCH values at the displaced threshold and runway end as shown in the following example:

TCH 32.4 at displaced THLD; 67 at runway end.

*NOTE: Flight inspection, as well as instrument databases, must be based upon the same GP orientation elevation. Use ASIS/AIRNAV as the official data source***.**

(3) For RNAV procedures, state whether the 34:1 obstacle assessment (see TERPS, Volume 1, paragraph 251) is clear or not; e.g., 34:1 is clear or 34:1 is not clear. If the 34:1 surface is not clear, those obstacles will be identified on Form 8260-9.

h. Line 8.

(1) Enter the identification and type of facility from which the MSA is computed. On ILS and LOC procedures, an NDB or VOR facility located on the localizer course must be used to provide MSA information when available. If an omni-directional NAVAID is not available on the LOC course, the primary omni-directional NAVAID serving that area must be used. When the MSA facility is an LOM, enter only the identification and type of facility. For RNAV, enter the named MAP waypoint, or, if at threshold, the appropriate identifier; e.g., RW16 or RW16R. For VOR/DME RNAV, enter the named RWY WP for straight-in, or named APT WP for circling.

(2) Enter the MSA information clockwise by sectors, if used. Do NOT establish sectors for MSAs on RNAV procedures. Sectors are referenced to bearings from the primary omni-directional NAVAID as follows:

MSA from OAK VORTAC 360-170 4900, 170-360 3700.

(3) Provide a single MSA only when the altitude difference between all sectors does not exceed 300 feet as follows:

MSA from XYZ VORTAC 7700.
MSA from RW16R 7700.
MSA from WGNUT 7700.

(4) Enter the radius of the sector if more than 25 NM; and when the facility-to-airport distance exceeds 25 NM, use a radius of up to 30 NM maximum to include the airport landing surfaces as follows:

MSA from ABC VORTAC 060-150 2300, 150-240 3000, 240-330 3600, 330-060 4200 (28 NM).

(5) Where more than one procedure for an airport is established on the **same facility,** the MSA sector divisions must be identical for each procedure.

(6) Amend procedures anytime the MSA value does not provide the minimum ROC.

853. TAKEOFF AND ALTERNATE MINIMUMS.

a. Takeoff Minimums. Where takeoff minimums for all runways at the airport are standard, check the "STD" box, and do not use Form 8260-15. If takeoff minimums for any runway are other than standard or if IFR obstacle departure procedures are in effect at the airport, check the box titled "See Form 8260-15 for this Airport" and complete Form 8260-15 in accordance with Order 8260.46. For COPTER procedures, leave both boxes **blank.** SIAP amendments specifically to address origination or cancellation of a Form 8260-15 are no longer necessary. NACO will take action based solely upon the Form 8260-15.

b. Alternate Minimums.

(1) To qualify for alternate minimums, an airport must have weather reporting at the airport and the weather must be reported on Service A weather sequences. Commercial operators who have an **approved weather reporting service** may be authorized alternate minimums without the requirement for Service A hourly aviation reports.

*NOTE: Alternate minimums **are** authorized on **RNAV (GPS) SIAPs**.*

(2) Chapter 2 of this order defines facility monitoring categories (1, 2, 3, and 4) and utilization of these categories. Alternate minimums must not be denied on **precision SIAPs** if the OM or authorized substitute does not have a remote status indicator. This is because the ILS/MLS is monitored, and the GS/GP provides intercept and descent guidance. However, this does not apply to **nonprecision SIAPs** or the LOC/AZ portion of an ILS/MLS SIAP; i.e., deny alternate minimums on a nonprecision SIAP if the facility is not monitored.

(3) Enter alternate minimums in the space provided. If sufficient space is not available in the Alternate Minimums block for all necessary data, the entry may be continued in the NOTES section or placed entirely on Form 8260-10. If continued in the NOTES section, separate the data from the landing minima notes by placing the data to the right side of the block. When necessary to use Form 8260-10, state: **"Continued on Page 2"** in the Alternate Minimums block.

(4) When alternate minimums are standard, enter the word **"Standard"**; when not authorized, place an **"X"** in the "NA" box. When part-time, or higher than standard for **some** categories, enter "Standard #" and annotate the appropriate condition by separate standard Note:

 # NA when control tower closed.
 # CAT D 1000-3

(5) When alternate minimums are non-standard; e.g., higher than standard for **each** category available for certain users, etc., do NOT place an X in the NA box. Enter # next to the "NA" box and annotate the appropriate condition by separate standard Note:

 # NA except standard for operators with approved weather reporting service.

 # CAT A, B 900-2, CAT C 900-2 1/2, CAT D 1000-3

(6) Make separate entries for the complete ILS/MLS and for the LOC/AZ-only on the Form 8260-3. Place reference symbols appropriately; e.g., (ILS: # or LOC: Standard **@**). Use standard Note:

 # CAT A, B, C 800-2, CAT D 800-2 1/2
@ CAT D 800-2 1/2

854. MINIMUMS.

a. General. Enter minimums in boxes provided. When dual minimums are authorized, additional boxes may have to be constructed. Enter straight-in minimums where rate of descent and alignment criteria are satisfied. Do NOT deny or cancel straight-in minimums in order to circumvent grant agreements that have been established under airport development programs. If criteria do not permit authorizing straight-in minimums, publish circling minimums only.

b. When a 10-mile procedure turn *(or greater) is established,* Category A, B, C and D minimums may be authorized.

c. When a 5-mile procedure turn *is established,* only Category A minimums are authorized; enter **NA** in the VIS column for Category B, C, and D aircraft. **For COPTER procedures**, delete the letter "A" and insert the word **"COPTER"**, and leave B, C, and D **blank.**

d. When specific minimums are not authorized, enter **NA** in the VIS column for the appropriate Category.

e. On runways under 4,000 feet in length, coordinate with the airport sponsor/operator to determine what categories of aircraft use the instrument approach procedure(s). Where Category D minimums will not be authorized, enter **NA** in the VIS column for Category D aircraft.

f. Make no entry in the Category E boxes, except where a valid military requirement exists. Use TERPS Table 10 to establish Category E minimums. However, these minimums must not be lower than civil Category D minimums. Do not authorize ILS Category II or III minimums for Category E military aircraft.

g. Types of Minimums. The types of minimums must be entered as **"S- (Runway No.)"** for straight-in minimums, **"Circling"** for circling minimums, and **"Sidestep (Runway No.)"** for sidestep minimums (see paragraph 405h).

(1) For COPTER procedures, on Forms 8260-3/ 4/5/7, enter "H-. For COPTER SIAPs straight-in to a runway," enter "H-(runway designation)." For all other COPTER SIAPs, enter "H-(numerical identification of the final approach course)".

(2) For RNAV (GPS) procedures, establish minimums for LPV, LNAV/VNAV, and LNAV. Label minimums for current standalone GPS approaches transferred to the new RNAV (GPS) plate, and the new nonprecision RNAV procedures, as "**LNAV**." Insert the term "**DA**" at the right edge of the minima box containing the terms LPV and LNAV/VNAV." Insert the term "**MDA**" at the right edge of the minima box containing the term LNAV.

h. DA/MDA. Enter the Decision Altitude (DA) or MDA authorized by criteria as an MSL value in each of the appropriate DA/MDA boxes by category of aircraft.

i. VIS. Enter the visibilities authorized by TERPS, Volume 1, Chapter 3. RVR authorized on runways to which straight-in minimums are published must be entered in feet; e.g., **4,000, 2,400, 1,800,** etc.

(1) When an RVR 1800 is authorized under Order 8400.13, Procedures for the Approval of Special Authorization Category II and Lowest Standard Category I Operations, enter a separate line of minima immediately below the standard minimums. Separate them with the heading "SPECIAL AIRCREW AND AIRCRAFT CERTIFICATION REQUIRED."

(2) See paragraph 404 of this order for guidance on using RVR on adjacent runways.

j. HAT/HAA.

(1) HAT. Enter height above touchdown zone elevation when straight-in minimums to a runway (including COPTER) are authorized. For COPTER straight-in and Point-in-Space (PinS) SIAPs noted to "*proceed visually*" to the landing site, enter **"HAL."** For COPTER PinS IAPs noted to "*proceed VFR*" to the landing site, enter **"HAS."** See paragraphs 857p and 858. When evaluating host nation procedures, where TDZE is not available, use runway threshold elevation to determine HAT. If neither is available, use airport elevation.

(2) HAA. Enter height above airport elevation for circling minimums.

k. ILS Category II/III. Include Category II/III minimums when authorized in the NOTES section immediately below the MINIMUMS boxes. Establish Category II minimums only for 100′ HAT, and 1600 and 1200 RVR. Enter these minimums as follows:

(1) *"Category II ILS Special Aircrew and Aircraft Certification Required* S-ILS 32L: DA 756 MSL, 104 RA, RVR 1200, HAT 100; CAT A, B, C, D."

NOTE: If a Category II procedure is developed under Order 8400.13, that is lacking ALSF and/or TDZ/CL lighting systems, enter the following in the NOTES section for publication on the approach chart: ***"Chart note: Procedure does not meet ICAO standard for ALSF/TDZ/CL lighting systems. Authorization to conduct this approach requires specific OpsSpec approval or LOA for this runway."***

(2) *"Category III ILS Special Aircrew and Aircraft Certification Required.* S-ILS-32L: CAT IIIa RVR 700; CAT A, B, C, D. CAT IIIb RVR 600; CAT A, B, C, D. CAT IIIc NA."

l. Dual Minimums. Enter dual minimums, when authorized. Do not publish dual minimums unless a 60-foot operational advantage is obtained or a reduction in visibility can be achieved. To avoid proliferation of

dual minimums, all IFR aircraft are assumed to have at least one VOR receiver. Dual minimums based on a stepdown fix combined with local and remote altimeter settings could result in four sets of minimums. When two remote sources are used, treat the source resulting in lower minimums as the "LOCAL" altimeter setting source in the following paragraphs. Document only two sets of minimums. The combinations authorized are minimums with and without a stepdown fix; or minimums with local and remote altimeter settings.

(1) When authorizing minimums with and without a stepdown fix and which also require local and remote altimeter settings, enter the minimums with and without the stepdown fix based on the LOCAL altimeter in the two sets of minimums boxes. Address the minimums with and without the stepdown fix based on the REMOTE altimeter setting in a Note and include the applicable visibility increases. Establish the required visibility as stated in paragraph 404.

NOTE: Normally an airport with an ILS does not have a remote altimeter setting. But where this does occur, the MDA adjustment might not be suitable for DA adjustment; i.e., the adjustment might be too great, and the visibility adjustments might differ.

(a) Compare visibilities to determine Note format:

1 Where precision and nonprecision visibility adjustment is the same, enter the following in the NOTES section: **"Chart note: When local altimeter setting not received, use (location) altimeter setting and increase all DAs/MDAs 60 feet, and all visibilities 1/2 mile."** Use this Note also when visibility is affected in ALL categories; apply the greatest visibility increase.

2 Where precision and nonprecision visibility adjustments differ and visibility is affected in all categories, apply the greatest visibility increase to all categories and define application as follows in the NOTES section: "**Chart Note**: **When local altimeter setting not received, use (location) altimeter setting: increase DA to 287 feet and all visibilities 1/4 mile; increase all MDAs 60 feet and all visibilities 1/2 mile."**

3. Where precision and nonprecision visibility adjustments differ and visibility is NOT affected in all categories, apply the greatest visibility increase only to those categories which are affected and define application as follows in the NOTES section: **"Chart note: When local altimeter setting not received, use (location) altimeter setting: increase DA to 287 feet and visibility CAT D 1/4 mile; Increase all MDAs 60 feet and visibility CATs C and D 1/2 mile."**

NOTE: CAT A is not affected until the HAT is more than 880 feet; CAT B is not affected until the HAT is more than 740 feet.

(2) When **dual minimums** are appropriate **with local and remote altimeter settings,** enter the title: **"(LOCATION) ALTIMETER SETTING MINIMUMS"** over the second set.

(a) When a procedure DOES contain a stepdown fix, but has only local or only remote altimeter setting minimums, enter the straight-in and circling minimums required **without** the stepdown fix in the first set of boxes. Enter the straight-in and circling minimums required **with** the stepdown fix in the second set of boxes.

(b) When a procedure does NOT contain a stepdown fix, but has both local and remote altimeter setting minimums, enter the local altimeter setting minimums in the first set of boxes and the remote altimeter setting minimums in the second set of boxes. Use the following Note: "**Chart note: When local altimeter setting not received, use (location) altimeter setting."**

NOTE: When the situation in paragraph 854l(1)(a)1 applies, a note is preferable to a second set of minimums.

(c) When a procedure does NOT contain a stepdown fix, but has two sets of part-time remote altimeter setting minimums, enter the lower minimums in the first set of boxes, and the higher minimums in the second.

(3) Stepdown fixes.

(a) On procedures where the course guidance and stepdown fix are obtained from **different VOR facilities,** publish two sets of minimums.

(b) On procedures where the course guidance and stepdown fix are obtained from **different NDB facilities,** publish two sets of minimums.

(c) Where paired DME is used and the procedure is NOT identified: ".../DME", use the fix name in the title: "**NIXON FIX MINIMUMS**."

(d) Where non-paired DME is used, as above, place an attention symbol (*) next to the title (e.g., **NIXON FIX MIMIMUMS***), and enter the following in Additional Flight Data: "***DME from XYZ VORTAC**."

(e) On procedures where the course guidance and the stepdown fix are obtained from facilities, which are of different types, publish two sets of minimums. Use one of the following titles to identify the dual minimums:

1 On procedures where the fix is predicated on DME only: **"DME MINIMUMS."**

2 On procedures where a fan marker is used for the stepdown fix: **"FM MINIMUMS."**

3 On procedures where the stepdown fix is identified by radar only: **"RADAR MINIMUMS."**

NOTE: When radar fixes are specified, ATC must agree to provide the radar service on a continuous basis and the fix must be identified on the video map or map overlay.

(f) On procedures where course guidance and a stepdown fix use the same type of receiver, annotate in the minimums box that dual receivers are required; e.g., "AGNES FIX MINIMUMS (Dual VOR receivers required)" or "AGNES FIX MINIMUMS (Dual VOR receivers or DME required)."

m. Landing Minimums Limitations. Minimums are affected by a number of different circumstances and conditions. Examples are enumerated below indicating the appropriate action to be taken.

(1) Day and Night Minimums. The authorized minimums apply to both day and night conditions unless otherwise restricted. AVN-100 must determine the operation of ALL lighting aids PRIOR to authorizing night minimums. Permanently installed **runway edge lights** (including threshold/runway end lights), defining the lateral and longitudinal boundaries of the runway, must be operating to support night minimums (see AC 150/5340-24). Airport or runway boundary lights are NOT adequate for night landing minimums unless the entire area between such lighting is suitable for landing. In special cases, portable runway lights may be used temporarily as described in AC 150/5345-50.

(2) Restriction of Night Minimums. When night minimums are not authorized or are higher than day minimums, a restriction must be entered in the NOTES section to deny night minimums or to specify increased night minimums.

(a) If unable to authorize night minimums, use: **"Chart note: Procedure NA at night."** See also paragraph 854m(13).

(b) If increased night visibility is required by environmental conditions, such as extraneous lighting, use: **" Chart note: Night visibility minimum__miles."**

(c) When straight-in minimums are published to an unlighted runway, but another runway is lighted, use: **"Chart note: Straight-in minimums NA at night."**

(d) When only circling minimums are published and at least one runway is lighted, a note is not required for non-lighted runways. When no runways are lighted, use: **"Chart note: Procedure NA at night."**

(e) At an airport with multiple runways where straight-in minimums are authorized to a lighted runway, but the other runway(s) is/are unlighted, a note is not required for the unlighted runways.

(f) When only circling minimums are published, and circling is not authorized at night, use**: "Chart note: Procedure NA at night."**

(g) When required by TERPS Volume 1, paragraph 251, use one of the following: **"Chart note**: **Procedure NA at night;**" or "**Chart note: Straight-in minimums NA at night;**" or **"Chart note: Circling NA at night;**" or **"Chart note: Circling to RWY XX NA at night**."

(h) When use of the VGSI is required to mitigate the requirement in TERPS to light an obstacle that penetrates the visual assessment area 20:1 OIS, thus permitting night IFR operations, use one of the following: **"Chart note: When VGSI inop, procedure NA at night;"** or **"Chart note: When VGSI inop, sraight-in/circling RWY XX procedure NA at night;"** or **"Chart note: When VGSI inop, circling RWY XX NA at night."**

(3) Inoperative Components and Visual Aids. The Inoperative Components and Visual Aids Table advises the pilot how much to increase published minimums when certain components or visual aids are known to be inoperative. When the inoperative table adjustment is not compatible with the credit that has been authorized, add notes to the procedure specifying the necessary adjustment. Enter one of the following in the NOTES section:

(a) When credit has not been given to a visual aid to reduce visibility, use: **"Chart note: Inoperative Table does not apply to MALS RWY 30."**

(b) In many instances, reference to a particular component or visual aid is not necessary as no portion of the inoperative table is applicable. In this case, use: **"Chart note: Inoperative Table does not apply."**

(c) When the inoperative table applies only to a few cases, use: **"Chart note: Inoperative table does not apply to CAT D"**; o, **"Chart note: inoperative table does not apply to S-LOC-31 CATs A and B."**

(d) The inoperative table, in certain circumstances, does not provide a sufficient increase to minimums. When this situation occurs, use: **"Chart note: For inoperative ALSF, increase S-7 CAT D visibility to 1 ¾;"** or **"Chart note: For inoperative ALSF, increase S-LOC-7 CAT D visibility to RVR 5000, and CAT E to RVR 6000."**

(e) Where two sets of minimums are published, specify the applicable minimums affected. For example, on a VOR approach with DME minimums published as the second set, use: **"Chart note: VOR Minimums: Inoperative Table does not apply to S-30 CATs C and D. DME Minimums: For inoperative MALSR, increase S-30 CAT D visibility to 1 1/4 mile."** Where the note applies equally to both sets of minimums, do not specify the minimums.

(4) Weather Reporting/Altimeter Setting.

(a) In accordance with TERPS paragraph 122d, an altimeter setting (local or remote) is required to authorize landing minimums. Terminal weather observation and reporting facilities (in addition to remote facility status monitoring) must be available for the airport to serve as an alternate airport. Some airports do not have any weather reporting while others provide this service on a part-time basis. A number of airports have the capability to report altimeter settings only on a full-time or part-time basis. Some operators provide approved weather reporting services, full-time or part-time, to their own company aircraft or on a contract basis to others. Evaluate these factors to determine the type of notation that may be required to support landing and/or alternate minimums. Enter these restrictuions in the NOTES section.

NOTE: The phrase "except for operators with approved weather reporting service" is used only when such service is available.

(b) When a remote altimeter setting source is available on a 24-hour basis, use of a **remote altimeter setting** on a **part-time basis** will normally coincide with the loss of the local altimeter source; e.g., control tower closed, FSS closed, local weather office closed, etc. In these instances, use: "**Chart note**: **When local altimeter setting not received, except for operators with approved weather reporting service, use Oakland altimeter setting and increase all MDAs 120 feet, and all visibilities 1/2 mile.**" Use city name unless more than one source is available in the city; then use the airport name; e.g., **"Chart note: When local altimeter setting not received, use Miami Int'l altimeter setting...."** Where appropriate, define application to DH and/or MDA, or address when visibility is NOT affected in all categories, within the standard note (see para-graphs 854l(1)(a)1 and 2).

(c) State identifiers. Include state identifiers ONLY if confusion is possible; i.e., more than one city with the same name in close proximity, e.g., **"Chart note: When local altimeter setting not received, use Springfield, MO altimeter setting and increase all MDAs 80 feet, and all visibilities 1/2 mile."**

(d) When an altimeter setting is provided at **uncontrolled airports**, use standard notes described in paragraph 855e.

(e) When use of remote altimeter setting **cannot be authorized**, use: **"Chart note: When Valle altimeter setting not received, procedure NA."**

(f) The adjustment for a remote altimeter setting source is **cumulative**; i.e., it is additional to any inoperative component adjustment, terminal segment MRA adjustment, or altitude increase to ensure communication reception.

(g) Round part-time altimeter adjustment values to the **next higher 20'** increment when publishing

a note to increase all MDAs by a specified amount. For example, if the adjustment value is 202.35′, specify to increase all MDAs by 220′.

NOTE: Use a part-time remote altimeter setting adjustment when determining descent gradient from a stepdown fix in final ONLY if used to determine the lowest landing minimums.

(5) Circling Conditions and Restrictions. Publish one circling MDA (CMDA) for each aircraft category. Where obstructions/terrain would yield excessively high CMDAs or environmental concerns would prohibit over-flight of specified areas, portions of the circling obstruction evaluation area may be eliminated through sectorization if instructions clearly define the areas where circling maneuvering is not allowed. Identify sectors by reference to runway centerlines by entering the applicable restriction in the NOTES Section as follows:

(a) When a 180° sector is defined by restricting circling from one side of a runway, use **"Chart note: Circling NA E of RWY 17-35.**"

(b) When a sector less than 180° is defined by restricting circling between two runways, use "**Chart note: Circling NA NW of RWYs 9 and 18."**

(c) When a sector of more than 180° is defined by restricting circling from one side of each of two runways, use: **"Chart note: Circling NA E of RWY 18 and NE of RWY 12."**

(d) When Circling minimums are restricted by aircraft category and runway combinations, use: **"Chart note: Circling NA for CATs C and D NW of RWY 6-24."**

(6) ILS restrictions. Where flight inspection establishes a restriction to the ILS approach, a facility NOTAM will be issued, and the restriction will be published in the Airport/Facility Directory (AFD). Where the restriction affects landing minimums or the MAP, issue an FDC NOTAM. Publish a note using the same wording as stated in the flight inspection report; e.g., **"Chart profile note: ILS unusable inside DA."** No note is required for an unusable LOC back course, or for a LOC lateral coverage restriction with no terminal route through the restricted area.

(a) If the LOC will not provide adequate course guidance in the area between the MM and runway threshold, use: **"Chart profile note: ILS unusable from MM inbound."** Where an MM is not installed, flight inspection may provide a NM distance from threshold, or altitude, at which the ILS is not usable.

(b) When the GS will not provide satisfactory vertical guidance, restrict its use above or below a specific altitude. Use: **"Chart profile note: GS unusable below/above (altitude)."**

(c) When GS indications can be received on a LOC back course approach, use: **"Chart profile note: Disregard GS indications."**

(d) When the rate of reversal in the GS exceeds the tolerances of Order 8200.1, United States Standard Flight Inspection Manual, section 217, establish a restriction for autopilot coupled approach 50 feet above the point (MSL) where the out-of-tolerance condition exists. Use: **"Chart note: Autopilot coupled approach NA below 540."**

(e) When terrain, obstacles, descent gradient, etc., do not allow the use of a LOC procedure associated with the ILS when the GS is not used, place **NA** in the visibility column for each LOC category affected. If, in such an instance, another procedure must be used instead, enter the following in the NOTES section: **"Chart planview note: When GS not used, use LOC RWY 26 procedure."** When circling is authorized, but the LOC procedure associated with the ILS is "NA," enter the following in the NOTES section: **"Chart note: Circling requires descent on GS to MDA."**

(7) Simultaneous Approaches. ILS approach procedures, which meet the requirements for simultaneous approaches, must be annotated as to which runways are authorized for simultaneous operations. This information will be entered in the NOTES section. For example, if simultaneous approaches are authorized to runways 27L and 27R, **each** ILS SIAP must refer to the other ILS SIAP; e.g., the following would be entered in the NOTES section: **"Chart note: Simultaneous approach authorized with RWY 27R"** (to be noted on ILS RWY 27L SIAP).

(8) Radio Controlled Lights. At many locations, lighting aids are radio controlled by the pilot. The standard keying system to activate the lights is described in AC 150/5340-27, Air-to-Ground Radio Control of Airport Lighting Systems. AC 90-42, Traffic Advisory Practices at Airports without operating Control Towers, establishes Common Traffic Advisory Frequencies (CTAF) to be used at uncontrolled airports including those with part-time towers. Radio control of

airport lighting systems from aircraft should be used only at airports where ATC facilities are not in operation. **Existing systems** that use frequencies other than the CTAF may continue to be used.

(9) All Special IAPs issued on Form 8260-7 must, until further advised, continue to have light activation notes. Use: **"Chart note: Activate MALSR RWY 25, MIRL RWY 7-25** (as appropriate) **- CTAF"** (or designated frequency.)

(10) PCL Note Charting. Pilot Control Lighting (PCL) is depicted on NACO SIAP charts by the use of negative symbology. NACO obtains information for adding the symbology to SIAPs from NFDC's National Flight Data Digest (NFDD). ATA-110 must review each published procedure to ensure that PCL charting is correct.

(11) Lights by Prior Arrangement. When the operation of lights must be arranged for before flight, enter the following in the NOTES section: **"Chart note: Procedure NA at night except by prior arrangement for runway lights."**

(12) Lights on Request. When lights are only available by radio contact with an FBO, airport manager, etc. use: **Chart note: Request MIRL RWY 7/22, and VASI RWY 22 - CTAF"** (or appropriate frequency if other than CTAF).

(13) Night landing minimums must NOT be authorized unless the requirements of AC 150/5340-27 are met. See also paragraphs 854m(1) and (2). Use: **"Chart note: Procedure NA at night."**

855. NOTES.

NOTE: See also paragraphs 252, 404, 804b, 805f, 853b, 854i, 854k, 854l, 854m(1) through (13), 871b and d, and 872g.

a. General. Data entered in this section of Forms 8260-3/4/5/7 are items that should appear on the published procedure chart as a note; e.g., notes pertaining to conditional use of a procedure, notes restricting the use of a procedure, and other notes required for procedure clarification. Unless dictated by IACC specifications, or specified as **"Chart planview note"** or **Chart profile note,"** all notes will be charted in the Briefing Strip, Notes section, of the procedure chart. When multiple notes are required, they may be combined under a single heading: e.g., **"Chart planview notes," "Chart profile notes,"** or **"Chart notes"** followed by the actual notes. If sufficient space is not available on the form for all necessary notes, continue on the Form 8260-10. When it is necessary to use Form 8260-10, state: **"Continued on page 2."**

b. Note Restriction. SIAPs must NOT contain notes that may be construed as regulating traffic. Notes such as "VFR practice approaches NA," if required, should be in the Airport Remarks section of the AFD. Notes regarding delays due to traffic also belong in the AFD.

c. Avoid caution notes about obstacles. Notes such as: "High Terrain all quadrants;" "Steeply rising terrain to 5300 4 miles SW of approach course;" or "50′ unlighted trees south of RWY 9 THLD" are NOT appropriate.

d. Avoid listing specific times in notes whenever possible, since a change in hours of operation would require amended procedures. Instead, refer to the situation directly relating to the cause. Use: **"Chart note: When control tower closed"** or **"at night."** When there is NO ALTERNATIVE, times may be used if the airport operator provides assurance that the hours will not change. Most operators adjust UTC hours of operation so that local hours remain the same whether or not daylight saving time is in effect. In such cases, it is appropriate to use local time in notes.

e. When a local altimeter setting is available at an uncontrolled airport, including those with part-time towers, the setting will be obtained on the established CTAF for that airport whenever possible. The NFDC is responsible for designating and publishing the CTAF (see AC 90-42, and AIM chapter 4). In such cases, a note may be required. Some operators provide approved weather reporting services, full-time or part-time, to their own company aircraft or on a contract basis to others. Conditions that require notes and the associated entry for the Notes section are as follows:

NOTE: The phrase "except for operators with approved weather reporting service" is used only when such service is available.

(1) At airports with a part-time tower and an FSS, the CTAF will be a tower frequency and will be monitored by the FSS whenever the tower is closed. No note should be needed if full-time altimeter setting service is provided.

(2) At airports with an FSS and no tower, the CTAF is an FSS frequency. No note is needed for a

full-time FSS. For a part-time FSS, use: **"Chart note: Obtain local altimeter setting on CTAF; when not received, use (location) altimeter setting and increase all MDAs 80 feet, and all visibilities 1/2 mile."** Where appropriate, define application to DH and/or MDA, or address when visibility is NOT affected in all categories, within the standard note (see paragraphs 854l(1)(a)1 and 2). If a remote altimeter source cannot be approved, end the note: **"...; when not received, procedure NA."**

(3) At airports with a part-time tower and no FSS, the CTAF will be a tower frequency even when the only altimeter source is UNICOM. In such cases use of UNICOM is authorized provided the note gives an alternate course of action if UNICOM is not contacted. In this instance, use: **"Chart note: When control tower closed, obtain local altimeter setting on UNICOM; when not received,** (alternate action)**."**

(4) At airports with no tower or FSS, with the altimeter setting available on UNICOM, the CTAF is UNICOM. An alternate course of action is required. Use: **"Chart note: Obtain local altimeter setting on CTAF; when not received,** (alternate action)**."**

(5) At airports with no tower, part-time FSS and UNICOM are not available, use the following when the FSS is shut down: **"Chart note: Obtain local altimeter setting from ATC; when not available, procedure NA.**"

(6) When using remote CTAF altimeter, use **"Chart note: Obtain West Allis altimeter setting on CTAF (122.8); when not received,** (alternate action)**."**

(7) Multiple altimeter sources must not result in more than two sets of minimums. If the chosen combination of local and/or remote sources does **not provide full-time coverage,** deny use of the procedure when no altimeter setting is available. Use the following: **"Chart note: When control tower closed, obtain local altimeter setting on CTAF; when not received, use Smith altimeter setting and increase all MDAs 140 feet, and all visibilities 1/2 mile; when neither received, procedure NA."** Where appropriate, define application to DA and/or MDA, or address when visibility is NOT affected in all categories, within the standard note (see paragraphs 854l(1)(a)1 and 2).

(8) When LNAV/VNAV minimums are based on remote altimeter setting, or the GPA is greater than 3.5°, or the final segment overlies precipitous terrain, Baro-VNAV is not authorized. Where a remote altimeter setting is primary, use: **"Chart note: Baro-VNAV NA."** Where the remote altimeter setting is secondary, use: **"Chart note: "Baro-VNAV NA when using (location) altimeter setting."**

f. Automated Weather Observing System (AWOS)/Automated Surface Observing System (ASOS).

(1) AWOS is an FAA sponsored, off the shelf, automatic observation system. The weather and altimeter information is forwarded to the pilot via discrete VHF radio frequency or on a NAVAID, and may be available on commercial telephone access. Additionally, many FAA maintained AWOS-3s are connected to the Service A FSS weather distribution network. AWOS is classified into **four basic levels:**

(a) AWOS-A. Reports altimeter setting only.

(b) AWOS-1. Reports altimeter setting, wind, temperature, dewpoint, and density altitude.

(c) AWOS-2. Reports the same information as AWOS-1 plus visibility.

(d) AWOS-3. Reports the same information as AWOS-2 plus cloud/ceiling data.

(2) ASOS is a National Weather Service sponsored automatic observation program designed to replace human observers. ASOS locations will have commercial telephone access, may have discrete VHF air-to-ground frequency, and will be connected to the Service A FSS weather distribution network.

(3) AWOS-3/ASOS transmitted on Service A does NOT require a *published* backup altimeter source, and no notes are required on the procedure. However, a suitable backup source must be determined and adjustment computed for contingency purposes; annotate this data in REMARKS on Form 8260-9. Each Flight Procedures Office (FPO) must determine if a procedure requires a full time remote altimeter setting note published based on reliability of the AWOS/ASOS.

(4) AWOS-A, -1, -2, and AWOS-3 not transmitted on Service A DO require backup altimeter sources. Do NOT publish backup altimeter source information as a second set of minimums, or increase visibility for the AWOS backup altimeter source. Instead, use: **"Chart note: If local altimeter setting not received, use (location) altimeter setting and increase all MDAs 100 feet."** Where appropriate, define

application to DA and/or MDA within the standard note (see paragraphs 8541(1)(a)1 and 2). If a suitable backup altimeter source is not available, deny use of the SIAP via the following Note: **"Chart note: If local altimeter setting not received, procedure NA."** Use these standard notes where AWOS is broadcast.

(5) AWOS may be used as a remote secondary altimeter source when data is available to Flight Service Station (FSS) specialists and ATC facilities through Service A.

(6) AWOS/ASOS at a remote location may be used as a primary altimeter source for an airport. In this instance, use: **"Chart note: Use (location) altimeter setting."** However, AWOS -A, -1, -2, and AWOS -3 not transmitted on Service A still require backup altimeter setting sources. In these cases use **"Chart note: Use (location) altimeter setting; if not received, use (location) altimeter setting and increase all MDAs 100 feet."** Where appropriate, define application to DA and/or MDA within the standard note (see paragraphs 854l(1)(a)1 and 2). When an airport uses a remote AWOS/ASOS that is not on Service A as a primary altimeter source, flight inspection ensures AWOS/ASOS discrete frequency reception at the IAFs of that airport.

(7) AWOS-3/ASOS may be used as a remote secondary altimeter source and to support alternate minimums at an airport when:

(a) AWOS-3/ASOS is installed and commissioned.

(b) AWOS-3/ASOS data are available to FSS specialists and ATC through **Service A** for flight planning purposes.

(8) When the AWOS/ASOS information is transmitted over a discrete frequency (not CTAF) or the voice portion of a local NDB or VOR, AWOS is receivable within 25 NM of the AWOS site, at or above 3,000′ AGL. If AWOS/ASOS is located on the voice portion of a NAVAID, flight inspection checks for interference. This check is performed prior to test transmissions.

g. ASR or ARSR may be available to provide assistance in vectoring to the approach course, identifying fixes, or to provide instrument approaches. Include applicable notes to inform the pilot of these capabilities and applicability to the instrument approaches.

(1) When ASR and/or PAR approaches are published for the airport, see paragraph 857m**.**

(2) Where radar is the only method for procedure entry from the en route environment, enter the following: **"Chart planview note: RADAR REQUIRED**.

NOTE: When the conditions of paragraphs 855g(2) and 855h(3) exist at an airport, BOTH entries are required. Prior air traffic coordination is necessary to ensure AT capability and agreement to provide these services. Procedures with radar requirements should be avoided whenever possible.

h. Equipment Requirement Notes. Determine the need for equipment notes after evaluating all SIAP segments, including missed approach.

NOTE: To avoid proliferation of equipment requirement notes, all IFR aircraft are assumed to have at least one VOR receiver. Therefore, the note "VOR required" is not appropriate.

(1) Where certain equipment is required for procedure entry from the en route environment, enter the following in Additional Flight Data: "**Chart planview note**: "**ADF REQUIRED**"; or, "**ADF OR DME REQUIRED**."

(2) Where other navigation equipment is required to complete the approach; e.g., VOR, ILS, or other non-ADF approaches requiring ADF or DME for missed approach, use: **"Chart note: ADF required",** or **"Chart note: DME required."** When radar vectoring is also available, use: **"Chart note: ADF or Radar required."**

(3) Where radar is the only method of determining or defining a terminal fix, use: **"Chart note: Radar Required."** [see paragraph 855g(2) note]

i. Approach Light Plane Penetrations. Do NOT publish notes advising of approach light plane penetrations. When there are penetrations of the approach light plane, the responsible region must take action to either remove the obstacle or modify the system to accommodate the obstacle. If this is not possible, the regional Airway Facilities Division processes an installation waiver. **Existing notes** referring to approach light penetrations must be removed from the approach procedure when an appropriate waiver has been approved.

j. The use of notes to prohibit a final approach from a holding pattern has been DISCONTINUED. The following guidelines apply:

(1) Where a holding pattern is established at a final approach fix in lieu of a conventional procedure turn, the minimum holding altitude must meet the altitude limitation requirements of TERPS Volume 1, paragraph 234e(1).

NOTE: Holding in-lieu-of PT at the FAF is not authorized for RNAV procedures.

(2) Where a holding pattern is established at an intermediate fix in lieu of a conventional procedure turn, the rate of descent to the final approach fix must meet the descent gradient requirements of TERPS Volume 1, paragraph 234e(2).

(3) Where a holding pattern is established for the missed approach at an intermediate or final approach fix, and a holding pattern is used in lieu of a procedure turn, the MHA for the missed approach must conform to the altitude or descent gradient requirements of paragraph 855j(1) or (2) above. Missed approach holding must not be established at the FAF for RNAV procedures.

(4) Where a holding pattern is established for the missed approach at an intermediate or final approach fix, and a holding pattern is NOT used in lieu of a procedure turn, establish a conventional procedure turn to permit pilot flexibility in executing a course reversal and descent to final approach fix altitude. This paragraph is not applicable to RNAV procedures.

k. When the missed approach point is more than 2 SM from the airport, use: **"Chart planview and profile notes: Fly visual to airport, 220° - 2.5 miles."**

l. DME frequencies are paired with the frequencies of the VOR, localizer, or MLS. When a non-paired DME is used in a VOR/DME, ILS/DME, etc., procedure, **simultaneous reception** of both facilities must be assured. This requires a note indicating the DME location and the identification of both facilities: **"Chart note: DME from XYZ VORTAC. Simultaneous reception of I-ABC and XYZ DME required**." DME frequencies are not paired with NDBs; and DME antennas may or may not be collocated with the NDB. For NDB/DME SIAPs, use: **"Chart note: Simultaneous reception of ABC NDB and XYZ DME required**." See paragraphs 854l, and 806c.

m. COPTER procedures require notes relating to missed approach instructions, as well as airspeed limitations on certain segments.

(1) For PinS approach procedures, use: **"Chart planview note: Proceed VFR from (MAP) or conduct the specified missed approach.**"

(2) For approach procedures to VFR locations 2,600 feet or more from the MAP, use: **"Chart planview note: Proceed visually from (MAP) or conduct the specified missed approach**."

(3) Use the following note when final and missed approach segment speed restrictions are required: **Chart planview note: Limit final and missed approach airspeed to 70 KIAS."**

(4) If holding airspeed is also restricted for containment in a smaller pattern, use the following note instead of the note in paragraph 855m(3) above: **"Chart planview note: Limit final, missed approach, and holding airspeed to 70 KIAS.**"

NOTE: A restricted airspeed holding pattern may also be used in lieu of the note. If desired, enter the following in Additional Flight Data: ***"Chart (restricted airspeed) holding pattern icon;"*** *e.g.,* ***"Chart 70 KIAS holding pattern icon."***

n. VGSI and IAP glidepath angles/vertical descent angles should be coincidental (angles with 0.2º and TCH values within 3 feet). Whenever a published glidepath/ descent angle is not coincident with the VGSI angle for a runway, use the applicable note below.

(1) Where precision approach (ILS, MLS, TLS, or RNAV glidepath angles and/or TCH values are not coincident with published VGSI values, use: **"Chart profile note: VGSI and (ILS/MLS/TLS/RNAV as appropriate) glidepath not coincident.**

(2) Where nonprecision vertical descent angles (VDAs) are not coincident with published VGSI values, use: **"Chart profile note: VGSI and descent angles not coincident."**

o. Where DME/DME RNP-0.3 is not authorized, use **"Chart Note: DME/DME RNP-0.3 NA**." Where DME/DME RNP-0.3 is authorized, use **"Chart note: DME/DME RNP-0.3 Authorized."** Where DME/DME RNP-0.3 is authorized only when required facilities are necessary for proper navigation solution, use: **"Chart note: DME/DME RNP-0.3 Authorized; ABC and XYZ must be Operational**.

856. MISSED APPROACH.

a. General. The missed approach represents a critical phase of flight; therefore, the missed approach should be designed with a minimum of complexity. The instructions on the form must reflect the actual design. The straight-ahead missed approach is the most desirable. Each missed approach (except radar) must terminate at a clearance limit (fix or facility).

b. Clearance limit altitudes specified in missed approach instructions may be rounded to nearest 100′ increments. **Other altitudes** used in the missed approach should also use 100′ increments. If this causes SIAP construction difficulties, use of 50′ increments is the preferred alternative, with use of 20′ increments the last resort.

c. Missed Approach Point. On precision and LPV procedures the DA establishes the MAP. On non-precision approach procedures, the MAP is established at a specified fix or at a specified distance from a fix or facility. On ILS/MLS procedures, the two MAPs should be coincidental. Additionally **identify both MAPs** - one for the full ILS/MLS (DA), and one for the LOC/AZ-only minimums (circling minimums if LOC/AZ minimums are not authorized). Identification of the LOC MAP will ensure the publication of a time/distance table on the associated approach chart. Specify distances to the nearest hundredth of a mile.

(1) Form 8260-3. For the precision portion of the ILS procedure, the MAP is pre-printed on the form as: **"ILS: at the DH."** For RNAV (GPS) enter as appropriate: **"LPV: DA", "LNAV/VNAV: DA," "LNAV: RW18".** Designate the LOC and/or circling MAP as a specific distance in hundredths of a mile after a specified fix or facility or at a specified fix or facility. When LOC-only minimums are NOT authorized, the descent must be made on GS to circling MDA (see paragraph 854m(6)(e)); change the preprinted term "LOC" to **"Circling."** If DME is available, establish a DME fix in hundredths of a mile for the nonprecision MAP.

(2) Forms 8260-4/5/7. In the box, titled "MAP", identify the missed approach point as **"a distance after (or at) a specified fix or facility"** as appropriate. Establish a DME fix in hundredths of a mile if DME is available.

(3) RNAV. Do NOT list MAP coordinates for GPS, or radial/DME for VOR/DME RNAV. Enter the name of the MAP WP as follows:

BONLI (MAP not at threshold)
RW16L (MAP at threshold)

d. Missed Approach Instructions. Where possible, develop missed approach procedures (except radar) using the same type of navigation guidance utilized for the final approach segment.

NOTE: When using the word "direct" in the missed approach instructions, ensure that all categories of aircraft are evaluated; i.e., CAT A is not encompassed in CAT D missed approach area and vice versa. On RNAV procedures, use the term "Direct" ONLY when design incorporates a DF leg.

Normally, a **missed approach course/heading** should be specified. If no course/heading is specified, the aircraft is expected to maintain the last established course/heading. Do NOT use the terminology "Climb runway heading" or "Climb straight ahead/; e.g., use **"Climb to 2,800..."** For turning missed approach procedures, specify the direction of turn; e.g., **"Climb to 3100 then left turn direct XYZ VOR/DME and hold."**

(1) Where the missed approach course differs from the final course: **"Climb to 2,800 via ABC R-180 to ABC VORTAC and hold."**

(2) When the missed approach point is also the missed approach holding fix and straight-ahead climb is not practical: **"Climbing right turn to 2500 in ABC VOR holding pattern."** In some cases, a straight-ahead climb or climb via a specified course/heading to an altitude, prior to returning to the holding fix, may be necessary for aircraft with larger turning radii. When this occurs, use the terminology in paragraph 856d(3) below.

(3) When obstacles in a turning missed approach area require an initial straight-ahead climb: **"Climb to 3100 then climbing left turn to 4000 direct ABC VOR and hold"** or **"Climb to 3,100 via ABC R-180 then climbing left turn to 4,000 direct ABC VOR and hold."**

(4) When circumstances (terrain, obstructions, special use airspace, etc.) require an immediate turn: **"Immediate climbing right turn to 4,000 direct ABC VOR"** or **"Immediate climbing right turn to 4,000 via heading 070 then direct ABC VOR and hold."**

NOTE: The word "immediate" is an emotion-laden word and should only be used when deemed

absolutely necessary by the procedure designer and/or flight inspection pilot to enhance safety.

(5) Missed approach procedures requiring a turn of more than 15° must **specify an altitude** that is at least 400 feet above the TDZE prior to commencing a turn. Round the resulting altitude to the next higher 100-foot increment: **"Climb to 1,200 then climbing left turn to 3,100 via heading 070 and ABC R-167 to ABC VOR and hold."** Alternatively, a specific point (fix, waypoint, etc.) that will allow sufficient distance, at an assumed 200 ft/NM or specified gradient rate of climb to reach 400 feet above TDZE may be used: **"Climb via ABC R-090 to 9 DME, then climbing left turn to 5,000 direct XYZ VORTAC and hold."** See also paragraph 856b for rounding guidance.

(6) If the procedure serves VOR as well as TACAN equipped aircraft, address TACAN requirements also: **"Climb to 5,500 via ABC R-111 then climbing right turn to 6,000 direct ABC VORTAC and hold (TACAN aircraft continue via ABC R-280 to CAROL 10 DME and hold W, LT, 100 inbound.)"**

(7) LOC courses are specified in compass points, and NDB courses as "courses to" or "bearings from:" **"Climb to 3,000 via I-ABC NE course and 350 course to DEF NDB and hold."**

(8) When the missed approach requires no specific direction of turn: **"Climb to 7,000 via ABC R-197 then direct ABC VOR and hold."**

(9) RNAV missed approach instructions must convey the intended wording to the employed leg type. For example, the word "course" reflects a CF leg design; "track" reflects a TF leg design; "direct" indicates DF leg. EXAMPLES: **"Climb to 5,000 via 080.22 course to SANDY and 104.56 track to GINGR and hold"** or, **"Climbing left turn to 5,000 direct CHERL and hold"** or **"Climb via 098° course to JARID, then climbing right turn to 6,000 direct BOYCA and hold."**

e. When a missed approach climb gradient in excess of 200 feet per NM has been approved, the required gradient must be published on the chart. Enter the required gradient in the NOTES Section as follows: **"Chart planview note: Missed Approach obstructions require a minimum climb gradient of (number) ft/NM**."

f. Missed Approach Holding. Holding must be established at the clearance limit. When holding is specified as part of the missed approach instructions, include holding details under Additional Flight Data. Do not enter holding details under Additional Flight Data when the missed approach is to the FAF or IF where a holding pattern is used in lieu of PT. When charting of the missed approach holding pattern is not required by ATC, include the evaluated holding pattern information in the Additional Flight Data with the note **"Do Not Chart."** Additionally, document on the Form 8260-9 reason for not charting.

(1) When a missed approach climb-in-holding is required, include this information in the missed approach instructions: **"Climb to 8,000 via 015 course to DIXIE and hold, continue climb-in-hold to 8,000"**.

(2) When a missed approach holding altitude has been established that does not permit a return to the IAF or allow for en route flight, include in the missed approach instructions the altitude that can be climbed to in the holding pattern upon ATC approval: **"Climb to 4,000 via 270 course to BONZO and hold. When authorized by ATC, Climb-in-hold to 9,000."**

NOTE 1: Adequate communication and Radar coverage must be considered when Climb-in-hold is dependent on ATC authorization.

NOTE 2: Climb-in-holding guidance also applies when the missed approach holding is collocated with a "hold-in-lieu" approach segment.

g. Alternate Missed Approach. Establish alternate missed approach instructions (when possible) when the instrument procedure navigation facility for the final and missed approach course differ. Additionally, alternate missed approach instructions may be established when requested by Air Traffic. Alternate missed approach procedures must not be charted. Alternate missed approach holding/ termination facility/fix must be charted in the plan view. If the alternate missed approach holding/ termination facility/fix is not already used in the procedure, then add a note in Additional Flight Data to **"Chart in planview: the facility/fix."** Alternate missed approach instructions must be preceded by the words: **"…or when directed by ATC,**" immediately following the primary missed approach instructions. Include detailed holding instructions. Include detailed holding instructions immediately following the alternate missed approach instructions.

h. NAVAID Outages. When temporary NAVAID outages (planned or unplanned) prohibit the use of the primary missed approach for a procedure, AVN-100 has the responsibility to ensure

an IFR missed approach procedure is published, either on the chart or by NOTAM in the event of lost communications. This does not preclude Air Traffic from issuing alternate climb out instructions.

857. ADDITIONAL FLIGHT DATA.

When additional information or data is essential to clarify the charting of a procedure or when the procedures specialist wants information charted, but does not want it to appear on the chart as a note, the necessary information/data must be entered in the Additional Flight Data section. Preface specific items to be charted with the term **"Chart."** Specific instructions to chart data must be held to a minimum (see also paragraphs 804b and 856f).

NOTE: Do NOT document takeoff obstacles on the 8260-9 or in Additional Flight Data.

a. If sufficient space is not available on the form for all necessary data, it may be continued in the Notes section or on Form 8260-10. When necessary to use Form 8260-10, state: **"Continued on page 2."**

b. Visual aids and runway information once printed on the approach chart may be omitted from the additional flight data section on future amendments. Other items such as holding information, restricted area data, final approach course alignment, etc., must be retained when amending a procedure.

c. Enter holding instructions as follows:

(1) When primary missed approach instructions provide for holding, enter Additional Flight Data as follows: **"Hold SE, RT, 313.09 inbound."** See paragraph 856f.

(2) Where alternate missed approach holding is established, enter the description as follows: **"Chart: alternate MA holding, Hold SE PUGGY, RT, 313.09."**

(3) Where unplanned holding is provided at the alternate missed approach clearance limit, enter the following: "**Chart alternate MA clearance limit, PUGGY (int, fix, DME, etc.).**

(4) Where arrival holding is operationally advantageous, enter: **"Chart arrival holding at PUGGY: Hold SE, RT, 313.09 inbound, 4,000."**

d. The nonprecision controlling obstacle in the primary and/or secondary area of the FAS must be shown as the FAS Obstacle. In the event a stepdown fix is used in the final approach segment, the controlling obstacle between the stepdown fix and the runway must be shown as the FAS obstacle. Designate the obstacle location to the nearest second. Any item listed without indicating "Chart" will be reviewed by the charting agencies and will be charted if it meets their charting specifications. Use standard Note:

*NOTE: **"FAS Obst: 317 Tower 364227N/ 0891523W".** For RNAV (GPS) procedures, LNAV and LNAV/VNAV controlling obstacles may differ. Identify BOTH as FAS obstacles; e.g.,*

"FAS Obst: 317 Tower 364227N/0891523W
143 Tree 364210N/0891501W"

e. To identify certain significant obstacles in or near the instrument approach area, include locations and heights under additional flight data. If, in the opinion of the procedures specialist, these obstacles could be **critical to flight safety,** they should be prefaced by the word **"Chart."** However, if the data is being furnished only as information, it must NOT be prefaced by the word "Chart." Charting agencies will chart any item marked "Chart." Any item listed without indicating "Chart" will be reviewed by the charting agencies and will be charted if it meets their charting specifications. List obstacles as follows: **"Chart 2674 antenna 372219N/0941657W"** or **"2674 antenna 372219N/0941657W."**

f. Obstacles close to a final approach or stepdown fix considered under TERPS Volume 1, paragraph 289, must be handled as follows:

(1) When paragraph 289 is applied to multiple obstacles, document only the highest obstacle in the 7:1 area.

(2) List the obstacle under Additional Flight Data as: **" 374 antenna 352416N/0881253W."** Do NOT identify it as a "paragraph 289 obstacle." Additionally, make the following entry in the Remarks section of the Form 8260-9: **"TERPS paragraph 289 applied to 374 antenna 352416N/0881253W."**

g. Installed visual aids will be shown on the aerodrome sketch. This information will be obtained and maintained by NACO. Changes are published in the National Flight Data Digest (NFDD).

h. Final approach course alignment, when required, is specified in Additional Flight Data as follows:

(1) Where the amount of offset from the ILS/MLS/LPV or LNAV/VNAV course relative to the runway centerline extended is other than zero, up to a maximum offset of 3.00° (15° for LNAV/VNAV), enter:

"Chart: LOC/Azimuth offset X.XX degrees."

NOTE: Compute the amount of offset to the nearest hundredth of a degree (0.01°) by measuring the difference between the true bearing of the FAC and the landing runway true bearing. True bearing values are as recorded in the Facility Data Record.

(2) For straight-in approaches, runway centerline at threshold, enter:

"FAC crosses RWY C/L extended 3,180 from THLD"; or **"FAC 450L of RWY C/L extended 3,000 from THLD."** (Left or right as used in the latter case is as viewed by the pilot.)

(3) For circling approaches, to the on-airport facility, or to the Airport Reference Point if the facility is off-airport, enter:

"FAC crosses intersection of RWYs 9-27 and 18-36."

"FAC crosses mid point of RWY 13-31."

i. When a flight check value is used for the final approach course instead of the plotted radial/ course/bearing, add the following: **"FAC is a flight check value."** See also paragraph 852c(1)(c).

j. When a procedure plan view area encompasses Special Use Airspace (SUA), use the following note as deemed necessary**: "Chart P-56."**

k. When simultaneous approaches are authorized, each approach must include an entry requiring the depiction of the adjacent localizer. Enter the data as follows: **"Chart LOC RWY 27R."**

l. RNAV Data. Publish the following data for RNAV procedures:

(1) For VOR/DME RNAV, enter the reference facility elevation; e.g., **"Reference facility elevation XYZ VORTAC 1160."**

(2) VOR/DME RNAV and LNAV/VNAV: Identify the distance to threshold from the appropriate DA: **"Distance to THLD from 354 HAT: 0.93NM."**

(3) LNAV and LNAV/VNAV: Enter final segment leg type when other than "TF"; e.g., **"Final segment (XX)."**

(4) For LPV: Enter the "Route Type Description", "Qualifier Descriptions", "WAAS Channel Number," and Reference Path Identifier (Approach ID) using the following example (see paragraph 499):

ROUTE TYPE DESCRIPTION: R
APPROACH ROUTE QUALIFIER 1: J
APPROACH ROUTE QUALIFIER 2: S
WAAS CHANNEL # 43210
REFERENCE PATH ID: W17A

(5) For LNAV/VNAV: Enter **"Chart WAAS Symbol"** when it has been determined that a WAAS signal may be unreliable for vertical navigation use.

m. ASR and/or PAR Approach Availability. When ASR and/or PAR approaches are published for the airport, enter the following: **"Chart: ASR" or "Chart: ASR/PAR"** – as appropriate.

n. Magnetic Variation. Except as provided in paragraph 803, enter the magnetic variation value upon which the procedure design and documentation is based.

(1) For non-RNAV SIAPs, enter the officially assigned variation value of the facility providing final approach course guidance.

(2) For VOR/DME RNAV SIAPs, enter the officially assigned variation value of the reference facility.

(3) For all other RNAV SIAPs, enter the officially assigned variation value of the airport served by the SIAP.

o. Enter the Epoch Year of the variation value as designated by AVN-160 (see paragraph 221c(1)).

p. For COPTER PinS procedures that serve more than one landing area and are noted to "proceed VFR" or Special procedures that have had a visual assessment accomplished and state "Proceed Visually," list available landing areas, landing area elevations, the courses in hundredths of a degree, and distances from the MAP in hundredths of a mile as follows:

Chevron Heliport, 10, 090.02/2.81
Phi Heliport, 20, 087.11/2.32
Garden Island Seaplane Base, 26
Garden Island Seaplane Base, 26, 129.08/14.92.

q. Where a VDP is established on a SIAP, identify the location of the VDP as follows:

(1) Non RNAV: Specify the VDP DME fix and distance to threshold.

Chart VDP at _____DME;
Distance VDP to THLD_____miles.

(2) RNAV and LNAV: Indicate the VDP distance to MAP.

Chart VDP at _____miles to RW16.
Chart VDP at _____miles to SUSIE.

(3) RNAV/VNAV: Indicate the VDP as applicable to LNAV only.

Chart VDP at _____miles to RW16*
*** LNAV only.**

r. For MLS, enter the following data:

(1) Limits of coverage; e.g., 300M to 060M

(2) Height above EL antenna for all fixes from FAF to MAP:

PFAF(1590), TP(1496), RP(1183), DH(194), RWY(44)'

(3) Describe the curved path including radius and direction of turn, course before and after the turn, along-track distance from each fix:

1.25 NM arc to RP
RT 351 deg to 133 deg
6.58 ATD from PFAF
6.33 ATD from TP
0.50 ATD from DA

s. RESERVED.

t. Enter charting instructions for maximum or mandatory altitudes; e.g., **"Chart mandatory 5,000 at DAVID."**

NOTE: Maximum or mandatory altitudes should be avoided where possible especially in the final approach segment. Maximum or mandatory altitudes in the final approach segment must be coordinated through AFS-420 prior to forwarding for publication.

u. Vertical Descent Angle (VDA)/TCH.

(1) For nonprecision SIAPs (except RNAV with published VNAV minimums), enter the descent angle, for the final approach, and the appropriate TCH: **NIXON to RW15: 3.26/55.** Where the VDA values are not coincident with published VGSI values, see paragraph 855n.

(2) For COPTER procedures, except those annotated "proceed VFR…" enter the visual descent angle (to the hundredth of a degree) from the specified descent point (MAP or ATD after MAP) to a specified hover height (20-foot maximum). Data entry format:

(MAP Name) **TO HELIPORT: 7.30/5′ HOVER**
or,

0.2 NM after (MAP Name) **TO HELIPORT: 7.50/20′ HOVER.**

NOTE: Except for COPTER procedures to runways, do not publish vertical descent angle data from FAF to MAP.

v. Computer Navigation Fixes (CNF): Enter charting instructions for CNFs; e.g., "**Chart (ABCDE) at intersection of DR leg and intermediate course."**

w. Arc IAFs: Enter the radial that defines the beginning of the arc initial segment; e.g., "**Chart ABC R-060 at WERNR**."

858. LOWER BLOCKS.

a. CITY AND STATE. Enter city and state name. Use the official two-letter state abbreviations.

b. ELEVATION/TDZE/AIRPORT NAME.

(1) Enter the official airport/heliport name (as stated on Form 5010-1). Enter **airport/heliport elevation** (as stated in the ASIS/IAPA database). For COPTER PinS procedures noted to "proceed VFR" to the landing site, revise "Elevation" and "TDZE," and enter "Surface Elevation." Then enter the highest terrain/ surface elevation within a 5,200-foot radius of the MAP. For multiple COPTER point-in-space SIAPs, enter **"Various Heliports."**

(2) Enter Touchdown Zone Elevation (TDZE) (as stated in the AMIS/IAPA database) for the runway designated in the procedure title. Enter the sidestep runway and TDZE, if applicable, below the first entry; e.g.:

TDZE: 28L 2854
TDZE: 28R 2858

Leave the TDZE **blank** if straight-in minimums are not authorized or if the procedure is a COPTER PinS procedure (see paragraph 857p).

c. FACILITY IDENTIFIER. Enter facility identification. On procedures predicated on proposed facilities and when an identification has not been assigned, leave this space **blank** and NFDC will enter the identification. For *VOR/DME RNAV* procedures, enter the identification of the SIAP reference facility. For RNAV, GPS, or FMS procedures, leave blank.

d. PROCEDURE NO.: Enter procedure identification as determined by TERPS Volume 1, chapter 1, section 6, and paragraph 802 of this order. When DME is required for the final approach, include **"/DME"** as part of the identification; e.g., VOR/DME, LOC/DME, LDA/DME, NDB/DME. For RNAV (or FMS for which GPS is required) procedures, use RNAV (GPS) RWY 22. When a procedure also contains CAT II/III minima, include the name of the additional procedure(s).

EXAMPLE: ILS or LOC/DME Rwy xx, Orig
ILS Rwy xx (CAT II) ILS Rwy xx (CAT III)

e. AMDT NO.: Enter "ORIG" or **"AMDT"** with the applicable amendment number/letter. The amendment number must be advanced whenever the procedure is revised. The type of revision will determine whether an amendment may be made or whether the procedure must be canceled and an original established.

(1) Cancellation of an existing procedure and establishment of an original procedure is required when:

(a) The city name is changed.

(b) The Part 97 subpart changes as a result of a change in equipment required to fly the procedure; e.g. "LOC" to "ILS or LOC;" "ILS" to "LOC;" etc. (see paragraph 802b)).

(c) Procedure ID changed from VOR-A to VOR-B, etc.

(d) The facility providing final course guidance is relocated if this changes the published final approach course.

(e) The reference facility is changed to another facility on a VOR/DME RNAV procedure.

(f) Straight-in minimums are added or deleted which require change to procedure ID; e.g., NDB RWY 28 to NDB-A.

(2) Amendment of a procedure is required when:

(a) The airport name is changed.

(b) The identification of the facility providing final approach course guidance is changed.

(c) Equipment is added to or deleted from the procedure which does NOT change the procedure ID; e.g., adding "DME Required" Note.

(d) Procedure ID changes from "VOR/DME" to "VOR/DME or TACAN;" "ILS" to "ILS or LOC/DME."

(e) The runway designation is changed due to renumbering of the runways.

(f) Any published fix, course, or altitude is changed.

(g) Any published distance is changed which:

1 Requires a change to the Time/Distance Table.

2 Is greater than 0.5 NM for distances outside the FAF, or greater than 0.1 NM for distances inside the FAF.

(h) Any minimums change.

(i) Airport elevation is changed where ceiling and/or visibility is affected.

(j) Frequencies are changed in notes on the Forms 8260-3/4/5/7, or military equivalent.

(k) Lighting changes occur which affect published visibility.

(l) L or R designation removed from title; e.g., VOR/DME RWY 18L/R changed to VOR/DME RWY 18L.

(3) A delayed amendment, not requiring immediate amendment action, BUT which must be processed at the next opportunity, is required when:

(a) The airport elevation/TDZE is changed BUT published ceiling and/or visibility is NOT affected.

(b) Lighting changes occur which do NOT affect published visibility.

(c) Safety of flight is no factor.

(d) Any published distance is changed which is less than or equal to 0.5 NM for distances outside the FAF, or less than or equal to 0.1 NM for distances inside the FAF.

(4) No amendment is required when frequencies are changed which were NOT entered in notes on the Forms 8260-3/4/5/7, or military equivalent.

f. EFFECTIVE DATE. The effective date of the procedure will **normally be entered by NFDC.** The only time the effective date must be entered by AVN-100 is when a **specific** effective date is required; e.g., a facility Mag Var rotation (see also paragraph 811c(4)). Due to the heavy workload associated with the 56-day airspace charting dates, NFDC will normally schedule routine procedure amendments for charting dates commensurate with NFDC and NACO workload. When an effective date is required which is **earlier** than can be routinely assigned by NFDC, AVN-100 and ATA-100 must coordinate to determine the appropriate course of action to expedite publication.

(1) Original Procedures. The effective date of original procedures must be in accordance with Order 8260.26; except that the 28-day change notice will not be published for Alaskan or Pacific procedures or for procedures that require en route charting changes.

(2) Routine Amendments. Routine amendments to SIAPs are made effective based on the time NFDC requires to process and distribute the SIAP, plus the time required for charting and distribution to subscribers. Normally this time period is nine weeks after receipt of the SIAP in NFDC. Procedures that contain an en route fix name change or re-identification must be made effective on the 56-day cycle charting date, to coincide with the publication of en route charts. Amendments to procedures pending flight inspection must be held by AVN-100 until the flight inspection is complete; then forwarded as "routine."

g. SUP:/AMDT:/DATED:

(1) SUP: Enter the identification of the superseded procedure if the name has changed.

(2) AMDT: If the procedure is original, enter "**NONE;**" otherwise, enter "**ORIG**" or amendment number as appropriate.

(3) DATED: If the procedure is original, leave **blank**; otherwise, enter previous amendment date.

859. RESERVED.

SECTION 8. STANDARD INSTRUMENT APPROACH PROCEDURE DATA RECORD, FAA FORM 8260-9

860. PREPARATION OF FAA FORM 8260-9.

The Standard Instrument Approach Procedure Data Record, FAA Form 8260-9, and the IAPA Data Record, must be prepared in accordance with the instructions below for each instrument approach procedure developed by AVN-100 or non-Federal procedure developers. The form is designed as a supporting document for the approach procedure. It serves as a checklist for the Procedures Specialist, as a technical reference for the Flight Inspector, and provides a permanent record of data currently available at the time of procedural development.

a. PART A: OBSTRUCTION DATA.

(1) BLOCK 1:

(a) App. Segment**.** Identify each Feeder, Initial, Intermediate, and Final segment, and stepdown fixes therein. If the IF is also an initial approach fix, identify the IF with **"(IF/IAF)"** in the "From" column. For precision approaches which have separate intermediate and final segments for the precision and nonprecision approaches, identify all: **Intermediate: ILS** and **Intermediate: LOC**; **Final: ILS** and **Final: LOC**.

(b) From/To. Enter **segment start/end points,** including stepdown segments, as listed in the Terminal Routes section of Forms 8260-3/4/5/7. Enter the **PT completion distance** in the "From" column opposite the intermediate or final segment, as appropriate. Enter the actual **missed approach point or runway threshold** (whichever is last) in the "To" column for the final/stepdown segments. Enter **"GS Intcp"** in the "From" column and **" THLD "** in the "To" column for precision final. Enter the **Hold-in-Lieu-of-PT facility/fix** in the "From" column, and the **holding template number** in the "To" column.

(c) Obstruction. Select the controlling obstruction as directed by chapter 2, section 11, *Obstacle Data.* Enter controlling obstruction type (tower, trees, terrain, AAO, etc.) and state obstacle number, if available, within each approach segment on one line. Enter segment (except final) highest terrain data on the next line. Number obstruction column entries sequentially as they appear on the form in blocks 1 to 4. **For obstructions or terrain common to other segments,** enter only the number from the "obstruction" column for each subsequent repetition, leaving the "coordinates" column **blank**, but completing remaining column entries.

(d) Coordinates**.** Enter coordinates in degrees, minutes, and seconds to the hundredth; e.g., **411532.01N/0943028.09W.**

(e) Elev MSL.

1 Enter the controlling obstacle/ terrain MSL elevation followed in parentheses by the appropriate accuracy code. Any required altitude adjustment due to accuracy code application is shown in the "Alt. Adj." column.

2 Enter the highest terrain elevation used for airspace evaluation to the nearest foot, followed in parentheses by that value rounded to the nearest hundred feet; e.g., 249 (200). See paragraph 507b. Do NOT assign an accuracy code to terrain used for airspace evaluation.

(f) ROC**.** Enter required obstruction clearance (ROC) for each segment. For precision, LPV, and LDA with glide slope approaches where the OCS is clear, enter "**ASC**" (all surfaces clear). For a Baro-VNAV final segment, enter **"PDA"** when the DA is determined by an obstacle within the required ASBL 250-foot ROC area. Where obstacle slope penetrations cause DA adjustment, enter the slope penetrated; e.g., **34:1**. Where obstacles require a glide slope higher than 3°, enter the slope supporting the higher glide slope; e.g., **31.9:1** (for a 3.2^{o} glide slope). Document obstacle penetrations per paragraph 860a(1)(c).

(g) Alt. Adj**.** Do NOT enter additives required for rounding purposes. State only the reason for and amount of adjustment, rounded to the next higher foot (see paragraphs 272a and b). The following **codes** should be used: **RA** - remote altimeter; **AS** - airspace; **AT** -air traffic; **AC** - accuracy code; **CA -** cardinal altitude; **SI** - straight-in minimums; **XL** - excessive length of final; **PR** - precipitous terrain; **HAA** - circling minimum HAA; **MA** - missed approach; **MT** – mountainous terrain; **PT** procedure turn; **DG** - descent gradient; **GS** - glide slope; **MEA** - minimum en route altitude; **MAH** - missed approach hold; **SA** - secondary area (also X/Y surfaces, transition areas). Enter the adjustment amount for all codes except AT, SI, HAA, PT, GS, MEA, and MAH.

For example: **AC50, SA-27, AS1500, etc.** If necessary explain the code used in Part C - REMARKS. For precision or APV approaches, where obstacles require a glide slope higher than 3°, enter **GS** but exclude the amount of adjustment.

(h) Min. Alt**.** The obstruction elevation + ROC + altitude adjustment = **minimum altitude** (computed); OR, high terrain elevation + airspace adjustment = **minimum altitude** (computed). Enter the appropriately rounded value. Make entries on the obstruction line as well as the airspace evaluation line. When possible, separate sets of segment entries with a blank line. The segment minimum altitude to be published must be the **higher** rounded value, and must match the respective altitudes shown on the corresponding Form 8260-3/4/5/7. For part-time remote altimeters, make entries in the final/stepdown "Alt. Adj." and "Min. Alt." columns on a separate line just below the entries for full-time altimeter. The minimum altitude values for nonprecision final/stepdown and circling must be rounded to the next higher 20-foot increment. For precision or APV approaches, enter DA and HAT values separated by a "/"; e.g., **1718/200, 1640/383,** etc.

(2) BLOCK 2: Identify the procedure turn fix/facility under the "From" column. Enter the procedure turn completion distance under the "To" column. If a procedure turn is not authorized, enter **"NA"** under the "from" column. For procedure turn entry zone obstacles, enter **"Entry Zone"** in the space above "Procedure Turn" as appropriate; leave "from" and "to" blocks blank. Allow two lines for obstruction/airspace evaluation entries.

(3) BLOCK 3:

(a) Identify the missed approach point (MAP). For precision or APV approaches, list both precision/APV and nonprecision MAPs (if not collocated), listing precision first. Enter the elevation of the missed approach surface (HMAS) at the MAP: enter the HMAS for precision or APV first, then for nonprecision. Separate both figures with a "/". For the LOC portion of an ILS with a stepdown, enter the surface elevation associated with the lowest MDA. Elaborate in REMARKS as necessary.

(b) Specify the clearance limit under the "to" column.

(c) Document the controlling obstacle (see paragraph 274b), including 40:1 surface penetrator and highest 1000′ level surface, by obstacle type, coordinates and elevation. Document highest terrain in the level surface primary area, as well as adjustments, etc. Specify the controlling obstruction, coordinates, and elevation where a climb gradient is required for ILS CAT II or III.

(d) Enter **"ASC"** in the "ROC" column. Enter the clearance limit altitude. Elaborate in REMARKS, if necessary.

(4) BLOCK 4: Enter the circling data for each category of aircraft authorized by the procedure. The required height above the airport (HAA), the straight-in MDA, or the circling ROC may determine the minimum circling altitude. When the minimum altitude has been established, enter the resulting HAA in the "actual" block. If two HAAs are available, enter both HAAs separated by a **"/"**. Enter controlling obstacle type and NACO obstacle number, if appropriate. Enter controlling obstacle coordinates to the hundredth of a second. Enter controlling obstacle MSL elevation followed in parentheses by the appropriate accuracy code. Enter ROC to the nearest foot. When HAA controls the circling minimum altitude, enter **"HAA"** in the "ALT. ADJUST." column; when the straight-in MDA controls the circling minimum altitude, enter **"SI."** Enter other adjustment codes and amounts as appropriate (see Block 1, paragraph g). Enter only the published minimum altitudes to the next higher 20′ increment. If use of a remote altimeter requires a higher minimum circling altitude, enter both values separated by a **"/"** (or only the remote altimeter value, if applicable).

(5) BLOCK 5: Identify the NAVAID or fix used as the MSA center point, the type of obstructions and their location by reference to bearing and distance (nearest 0.1 NM) from the center point. Enter the controlling obstruction type (tower, trees, etc.) for each sector. Enter the MSL elevation of the respective controlling obstacle to the nearest foot followed in parentheses by the appropriate accuracy code. Enter the resulting MSA in the appropriate block in hundreds of feet. If a "common safe altitude" is established, define only one sector (360° - 360°) and only the one controlling obstacle. Enter appropriate data for RNAV procedures incorporating a TAA with an MSA sector established in lieu of a TAA sector.

(6) CITY AND STATE; AIRPORT AND ELEVATION; FACILITY; PROCEDURE AND AMENDMENT NO.; REGION: Enter city/state, airport name and elevation as on Forms 8260-3/4/5/7. Enter facility identification and type; for non-VOR/DME RNAV, enter “FMS” or “GPS” or “RNAV” as appropriate. Enter the procedure name if the procedure is an original, enter **“ORIG”** or if an amendment, enter

"AMDT" with the applicable number. Enter the three-letter code for the FAA region responsible for the SIAP.

b. PART B: SUPPLEMENTAL DATA.

(1) BLOCK 1: Identify the facility or facilities providing approach control and terminal service to the airport. If no full-time or part-time control tower, include the associated FSS. Flight inspection reports are the source for the primary frequency bands in which satisfactory communications are provided. For clarity, facility identification should agree with those used in the Airport/Facility Directory (AFD.)

(2) BLOCK 2: Identify the facility providing the weather reporting service, the location with reference to the airport served by the procedure, and the hours that weather service is available to the public. Split the boxes as necessary to indicate multiple sources. "FAA" requires a weather observer. Enter AWOS, including level, SAWRS, LAWRS, ASOS, etc., in "Other."

(3) BLOCK 3: Identify by location identifier the altimeter setting source (or sources separated by a "/"). If the altimeter setting is derived from a remote source, indicate the distance to 0.01 NM and clock hours of remote service. Indicate the resulting altitude raw adjustment (ROC increase) to 0.01 feet. Use this value rounded to the next higher whole foot increment in the "ALT. ADJ." column in Part A.

(4) BLOCK 4: Identify the primary NAVAID (facility providing final approach guidance) and the point providing Category 1 monitoring service. Space is provided to show hours of operation by category 1 and Category 3 monitoring service at part-time monitoring points. The secondary NAVAID is used to provide the same information for supporting NAVAIDs utilized for descent fixes in the final approach segment. Alternate minimums must not be established lower than the crossing of a fix predicated on a Category 3 monitored NAVAID, either primary or secondary. For GPS or RNAV or non-VOR/DME RNAV, leave blank. For VOR/DME RNAV, enter the Reference Facility 3-letter ID.

(5) BLOCK 5: Identify the type of controlled airspace underlying the final approach course (FAC) by checking either (or both) Class B/C/D/E Surface Area, or Class E 700′ airspace. Leave blank if airspace not yet established. Enter the effective hours of the surface area.

(6) BLOCK 6: Indicate the available approach and runway lighting for the airport and list the runways served by each type of lighting aid. Complete preprinted entries on computer generated form. Enter VASI, PAPI, etc., data in "Other." Enter **"(PCL)"** in the respective block when pilot controlled lights are available.

(7) BLOCK 7: List the runways with serviceable runway markings. Place **"BSC"** data on Runway line, **"PIR"** data on "All Weather" line, and **"NPI"** data on "Instrument" line. Place non-standard data in REMARKS.

(8) BLOCK 8: List each runway served by runway visual range (RVR) in the approach and roll out ends. Enter midfield RVR data on first line: e.g., **"Midfield 31"**.

(9) BLOCK 9: Provide GS/GP information as indicated for all precision and APV procedures to the following accuracy: GS/GP angle - nearest .01°; distance THLD to GS/GP Ant - nearest foot; elevation RWY THLD and GS/GP Ant - nearest 0.1 foot; TCH - nearest 0.1 foot. These values must agree with the approved database.

(10) BLOCK 10: Identify the desired approach course aiming point as determined by the procedure construction. Normally this will be the runway threshold or a point on the runway centerline extended at a specified distance from the threshold. Check both blocks on any precision or APV approach, or where the FAC is directly aligned to the runway threshold. For distances, from threshold between 3,000′ and 5,200′, enter the specific value. For those final approaches that parallel the runway centerline extended or intersects the centerline more than 5,200′ from the threshold, specify "3,000′ from c/line" as well as the distance between the FAC and the centerline extended at that point. For circling or point-in-space alignment, explain in REMARKS.

(11) BLOCK 11: Specify the total number of waivers approved for each approach procedure and the dates of AFS approval. Where no waivers have been issued, indicate **"None"** in the "Number of Waivers on File" box.

c. PART C: REMARKS. Use this space to amplify previous entries (state associated block number for reference), or to record essential data not considered elsewhere on the form. See also paragraphs 431, 852c(1)(c), and 857f.

(1) For visibility computations, make entries only if a paragraph 251 surface is penetrated: **"Para 251, 34:1 penetration."**

(2) State the effect, if any, of waivers to published minimums.

(3) For VOR/DME RNAV SIAPs, enter the MA fix XTRK error.

(4) For RNAV SIAPs, state the type and coordinates of the obstacle penetrating the RNAV obstacle slope.

(5) Enter the amount of threshold displacement, if any.

(**6) Enter airspace date required** by paragraph 507k. Carry this information forward until amended. Alternatively, this information may be entered on any acceptable format for provision of airspace data to ATC. This form must document ALL the data requirements of paragraph 507k.

(7) When flight inspection determines TCH in accordance with Order 8260.3B CHG 19, enter: **"Flight Check RDH _____ft., (Order 8260.3B CHG 19)."** Substitute ARDH for RDH if appropriate.

(8) When flight inspection establishes a final FAC other than the plotted magnetic course, enter:

"Plotted FAC is 0.87.43° M."
"Electronic flight inspected FAC is 089° M."

(9) Enter EDA high/low terrain data if appropriate, including coordinates and elevation, for each RASS evaluated and used. (Data may be entered on front side if room allows.) If appropriate, identify the RASS by ICAO airport ID:

EDA (KEWR) 404353N/0741525W 280′MSL
404000N/0740760W 0′MSL

(10) For RNAV Baro-VNAV procedures, enter Critical Temperature computations if other than standard (see paragraph 497).

(11) Enter a reason when a VDP has not been established (see paragraph 431): e.g., **"VDP NOT ESTABLISHED – Obstacles penetrate VDP surface."**

(12) Enter LPV and LNAV/VNAV inner and outer slope values.

d. PART D: PREPARED BY. Enter the name and title of the AVN-100 specialist or non-Federal developer responsible for preparing the data record; the date prepared; and the originating office.

e. PART E: Instrument Approach Procedure. Disregard the preprinted "Part E: Instrument Approach Procedure" section on manual forms. Continue REMARKS as necessary here and in the corresponding block on computer generated forms. A graphic sketch of the plan and profile views of the approach procedure and the operational minimums as envisioned by the Procedures Specialist must be depicted on a separate 8 1/2" x 11" sheet. This graphic presentation becomes part of the AVN-100 file. It assists the cartographer in visualizing the desired IAP layout; and is required to test the validity of the narrative procedure and to uncover any potential charting problems prior to formal publication.

f. Distribution. Retain completed copies of the Form 8260-9 with the associated SIAP and distribute as defined in Table 8-1.

861-869. RESERVED.

SECTION 9. COMPLETION OF FORMS 8260-4/7/10

870. GENERAL

This section contains information applicable to the completion of Forms 8260-4/7/10. Basic guidance on the completion of these forms is covered in section 2 and only items, which differ from that guidance, are contained in this section.

871. FORM 8260-4, RADAR.

Instructions for completion of Forms 8260-3/5/7/10 are also applicable to Form 8260-4, except as follows:

a. Radar Terminal Area Maneuvering Sectors and Altitudes. When an MVA chart for these areas has been approved for ATC use by AVN-100, do not repeat this data on the Form 8260-4. In such cases, enter a note describing the source of the data as follows:

"As established by the current Macon ASR Minimum Vectoring Altitude Chart."

(1) Where the MVA at the FAF is equal to/less than the FAF altitude, document the final segment on Form 8260-9 (see also paragraph 871d(1)).

(2) Where the MVA at the FAF or at fixes preceding the FAF is greater than the FAF altitude, document those segments prior to the FAF on Form 8260-9 (see also paragraph 871d(2)).

b. Radar Missed Approach Point and Missed Approach Instructions. A missed approach point and missed approach instructions must be provided for each runway authorized radar straight-in landing minimums. A missed approach point and missed approach instructions must also be provided when only circling minimums are authorized. This data should be included in the missed approach section of Form 8260-4. Radar missed approach procedures should return the aircraft to a fix or facility without a requirement for radar guidance. If sufficient space is not available, only the missed approach point data should be included and the missed approach instructions placed in the NOTES section or on the 8260-10 continuation sheet.

c. Approach Minimums. The minimums section must be completed as indicated in paragraph 854.

d. Radar Notes.

(1) Establish a FAF, minimum altitude (glide slope intercept altitude for PAR), and final approach course for each runway for which radar procedures are established. Runway designation may be omitted if only one runway has a radar approach.

(2) For ASR, provide recommended altitudes for each mile on final, but not below the lowest MDA.

(a) Calculations are made using:

- FAF altitude

- Threshold elevation (RWTE) or airport elevation for circling-only approaches or missed approach point elevation for point-in-space approaches.

- Distance from FAF to threshold (RWT) when straight-in authorized (distance from FAF to missed approach point when circling-only minimums are authorized, or for point-in-space approaches). Round recommended altitudes to the **nearest** 20-foot increment.

(b) For ASR circling-only approaches, calculations to MDA at MAP could result in recommended altitudes exceeding 400 feet per mile descent gradient. If this occurs, adjust the recommended altitudes so the descent gradient (before rounding) does not exceed 400 feet per mile. Consider relocating the MAP or moving the FAF outward from the runway to achieve an acceptable descent gradient.

(c) The following example calculation illustrates two descent gradients due to a stepdown fix. If ROC would permit a stepdown fix altitude BELOW the normal gradient, raise the minimum altitude at the stepdown fix to preserve a constant gradient.

[Example Condition: FAF 7.8 miles from threshold, minimum altitude 9,000, minimum altitude 3 miles fix 7,300. RWTE 6172. MDA 6800.]

9000-7300 divided by 4.8 = 354 feet per NM.
0.80 x 354 = 283.

9000-283 = 8717 at 7 miles = 8720.

8717-354 = 8363 at 6 miles = 8360.

8363-354 = 8009 at 5 miles = 8000.

8009-354 = 7655 at 4 miles = 7660.

7655-354 = 7301 at 3 miles = 7300.

7300-6162 divided by 3 = 376 feet per NM.

7300-376 = 6924 at 2 miles = 6920.

6924-376 = 6548 at 1 mile = NOT USED:
Below MDA

Example Form 8260-4 entry:

"RWY 17 FAF 7.8 miles from threshold (at LACKI OM), minimum altitude 9,000, minimum altitude 3 miles fix 7,300, final approach course 168. Recommended altitude 7 miles 8,720, 6 miles 8,360, 5 miles 8,000, 4 miles 7,660, 3 miles 7,300, 2 miles 6,920."
(No underline is currently possible using the computer generated 8260-series forms.)

(3) When segments prior to the FAF are required, establish the fixes and minimum altitudes in a note preceding the note cited above: **"9.4 miles from threshold, minimum altitude 9,000."**

(4) Define the final approach course in the NOTES section when circling is the only minimum authorized: **"FAF 6 miles from runway intersection, minimum altitude 8,000, final approach course 060 aligned to intersection of runways 2 and 15."**

(5) If radar availability is limited, use standard note: **"When control tower closed, ASR NA."** (This is a radar SIAP note only - not to be used on other SIAP types.)

(6) Lost communications instructions must be entered as follows: "**As directed by ATC on initial contact.**

e. Additional Flight Data.

(1) Enter the TDZE in the preprinted area for each runway authorized straight-in minimums.

(2) Indicate the FAS obstacle for each runway having straight-in minimums or a circling-only approach.

(3) Enter the GS angle, TCH, and distance from RWT to RPI in feet for PAR approach procedures.

(4) Enter the facility magnetic variation and Epoch Year as obtained from AVN-160.

f. Lower blocks. Data must be the same as Forms 8260-3/5/7 (see paragraph 858) except as follows:

(1) FACILITY IDENTIFIER. Enter the identifier of the controlling facility and the type of radar; e.g., **"COS ASR," "TBN ASR/PAR."**

(2) PROCEDURE NUMBER. Radar procedures must be numbered in sequence; e.g., **"Radar 1, Radar 2, etc."** Runway numbers must be shown in the minimums section.

872. FORM 8260-7, SPECIAL INSTRUMENT APPROACH PROCEDURE.

a. See chapter 4, section 4, for Special Procedure development, approval, and processing instructions.

b. Completing Form 8260-7. This form will be incorporated as an amendment to the operations specifications of the certificate holder. The form may also be issued with a Letter of Agreement (LOA) to Part 91 operators. Instructions for completion of Forms 8260-3/5/10 are also applicable to Form 8260-7, except as follows (see paragraphs 854m(9)):

(1) If a named fix, which is not an en route fix, is required for the special procedure, the fix must be documented on a Form 8260-2 and processed in the normal manner. The FPO must provide a copy to the user.

(2) IFR Departure Procedure/Takeoff Minimums. At locations where there are no public or existing Departure Procedures (DP) established and TERPS evaluation reveals that standard takeoff minimums cannot be authorized, a DP must be established. A special DP must be documented on the appropriate 8260-15 series form under Order 8260.46. The appropriate block must be checked on Form 8260-7 to indicate the need to "See Form 8260-15 for this airport," so that a DP will accompany the approach procedure when charted and/or disseminated. Enter the term "SPECIAL" in the "Effective Date" block on the Form 8260-15. If a public SIAP exists for the airport, the published public DP applies.

c. Approval.

(1) Following quality review, the person who developed the procedure signs the original Form 8260-7

in the upper portion of the space under "Developed by." Pending revision of the form, insert the term "Recommended by" in the lower half of this space that must be signed by the Manager, AVN-100, or the designated representative. Forward the completed form to AFS-400 for final approval.

(2) For procedures developed by non-government sources, see the guidelines established in chapter 4, section 4, Special Instrument Procedures Processing.

d. Printing and Distribution. The regional Flight Standards Division must provide for reproduction of the special procedure forms and must provide copies in accordance with the following recommended distribution. Modify intra-regional distribution as required:

(1) Principal Operations Inspector for the air carrier or air taxi operator with additional copies to the FSDO having jurisdiction over the airport of concern.

(2) For other operators, copies to the requesting user through the associated FSDO.

(3) Regional Air Traffic Division.

(4) Air Traffic facility exercising control at the airport of concern.

(5) ATA and ALPA/APA if intended for air carrier use.

(6) Courtesy copy to Jeppesen Sanderson, Inc. and other cartographic agencies that may request copy service.

(7) ATA-110.

(8) AVN-100.

(9) Airport Manager.

e. Radar Special Procedures. If there is a requirement for a radar special procedure, use Form 8260-4 in lieu of Form 8260-7. Delete reference to Part 97.31 and add the word **"Special."** Use the reverse side of the Form 8260-7 to document the approval and to provide for incorporation in the Operations Specifications.

f. Limitations on the Use of Special Procedures.

(1) The Form 8260-7 is used for the design of special instrument approach charts and is NOT intended for cockpit use. The requirement that the procedure be charted is specified in the heading of the form. Add the following statement in the NOTES section of the Form 8260-7 restricting the use of the form**: "Specification only - Not for Cockpit Use."**

(2) Where a special procedure requires certain crew qualifications, training, or other special considerations in order to execute the approach, the NFPO must add the following statement in the NOTES section of the Form 8260-7 restricting the use of that procedure to a particular operator: **"For use by ABC Airlines only."** If more than one user is authorized the same special procedure and there are no differences in the procedure design, the FSDO must maintain a list of authorized users. This will preclude amendments to the 8260-7 forms when users are added.

(3) Regional development and/or documentation of foreign terminal instrument procedures (FTIP) is not recommended unless the procedures can be subsequently maintained by the initiating region under Order 8260.31. In such cases, the FTIP may be documented on Form 8260-7 and processed in accordance with Order 8260.31.

873. FORM 8260-10, CONTINUATION SHEET.

a. Use. Form 8260-10 is used as a continuation sheet for Forms 8260-3/4/5/7. In all cases, clearly identify by name or format what section or information is being presented on the continuation sheet. The Form 8260-10 must be completed as follows:

(1) Enter the type procedure and 14 CFR part numbers as required.

(2) Enter the necessary procedural data in the space provided.

(3) Enter the "Lower Blocks" identical to the information presented on page 1 of the SIAP (see paragraph 858).

(4) Enter the page number and number of pages required for the procedure in the lower right-hand corner e.g., Page **2 of 2 pages.** The basic Forms 8260-3/4/5/7 must be page number one, with additional Forms 8260-10 numbered sequentially.

b. Certification. The last page must be the only page certified except for special instrument procedures, which must be certified on the reverse side of the basic Form 8260-7.

874-879. RESERVED.

SECTION 10. TRANSMITTAL OF AIRWAYS-ROUTE DATA FAA FORM 8260-16

880. PREPARATION OF FAA FORM 8260-16.

This form serves as a transmittal sheet of en route procedural data to be published under 14 CFR Part 95. It records current en route information. All airway/route changes/cancellations must be documented on Form 8260-16 to ensure publication. Document only one airway per Form 8260-16. If airways overlap, document each on a separate form.

a. AIRWAY NO. OR ROUTE. Enter the **airway number**, **"Part 95 Direct,"** or **"Off-Airway Non-95"** as appropriate. Use a separate form for each type of route.

Examples: *For RNAV routes - Q502*
For Jet routes – J345
For Victor Airways – V123

b. FROM/TO. Each segment (fix to fix) must be listed, unless succeeding segments have no significant changes. Segments must be separated at facilities, flagged fixes, and changes of MEA, MOCA, or MAA. All airways and routes terminate at the U.S. control area boundary (route alignment may be explained in REMARKS).

(1) Route segments are normally listed from West to East for even numbered airways, or South to North for odd numbered airways. When amending published routes, follow the order of listing in the semi-annual consolidation of 14 CFR Part 95 routes.

(2) Fixes are identified by name, state, and type.

c. ROUTINE OR DOCKET NO. Enter the docket number when the request is associated with an airspace action. If processing is to be routine, leave **blank.**

d. CONTROLLING TERRAIN / OBSTRUCTION AND COORDINATES. When controlled air space is a factor in MEA determination, make two entries: the highest terrain and the highest tree or man-made obstacle (if above the highest terrain). Use the **" @ "** to identify which obstacle controls the MEA, even though MRA may require a higher altitude. Show coordinates to the minute (seconds optional). Annotate a controlling obstacle that is in the secondary area, and show the required obstacle clearance. No entry is required for high altitude (Jet or RNAV) routes if terrain is not a factor. Enter reduction of mountainous obstacle clearance.

e. MRA/MOCA. Enter both figures. To reduce chart clutter, MOCAs less than 500 feet below MEAs should not be published unless they allow use of a cardinal altitude within 25 SM of a facility. If a MOCA is not to be published, line it out (the figure will still be legible for office record purposes).

f. MAA/MEA. Enter both figures. When dual MEAs are used, show the directions of flight. When an MEA change occurs at a DME-only fix, dual MEAs are required since non-DME aircraft cannot receive the fix. When minor MEA differences exist in adjacent segments, coordinate with ATC to establish a common altitude.

g. GNSS MEA. Do not establish a GNSS MEA unless it is at least 500′ lower than the conventional MEA. The GNSS MEA must be a cardinal altitude at or above the MOCA and provide communication capability as required in TERPS.

NOTE: These MEAs will be depicted on En route charts with a "G" suffix. Example: 3500G

h. CHANGEOVER POINT. Enter the changeover point in the segment where it lies. If midpoint, leave **blank.** If NOT midpoint, enter the mileage from and the identifier of the nearest facility. If a **gap** exists, the changeover point may be at the middle of the gap; however, leave **blank.** If a **dogleg**, enter **"DL."** If the dogleg point is a fix, enter the fix name. Establish a named fix on all dogleg airways that meet en route VHF intersection criteria. Establish a named DME fix or CNF on all dogleg airways that do not meet VHF intersection criteria.

i. FIX MRA/MCA. Entries here are referred to the appropriate fix by an attention symbol **(*).** The same information is required on the Form 8260-2 for the fix. Show the direction of flight for MCAs.

j. REMARKS. Use this section for all pertinent supporting data. Typical entries include:

Airspace floor
Terrain clearance applied
Dogleg radials for Part 95 Direct and Off-Airway Non-95 Routes

Reason for MEA adjustment
Reason for MAA reduction
MEA gap
Cancel segment (reason)

(1) To assist charting agencies, when segments are amended or canceled, describe the changes in this section or elsewhere on the form as appropriate.

k. FLIGHT INSPECTION DATES. Enter the date of the original flight inspection, if available, or indicate "On File." Use **"Pending"** for new/relocated facility dockets. If flight inspection records are not available, leave blank. Use additional lines to log subsequent flight inspections, periodic reviews, and amendments. When the form's available spaces are filled, whiteout the entries on manually completed forms, and start over. Regenerate electronic forms as necessary when available spaces are filled, deleting previously entered dates. Carry forward any manually entered dates.

l. DISTRIBUTION. The approved Form 8260-16 must be prepared by AVN-100 and distributed as defined in Table 8-1.

m. Examples: Figure 8-3 contains a consolidated group of examples that can be used when completing Form 8260-16.

n. CANCELLATION. Airways cancellation is accomplished through the rulemaking process. Regions publish a Notice of Proposed Rulemaking (NPRM), and upon publication of the final rule, NFDC removes the affected airways from 14 CFR Part 95. Individuals completing this form remove or line through, as appropriate, the Form 8260-16 entries referenced in the final rule.

881-889. RESERVED.

TRANSMITTAL OF AIRWAYS / ROUTE DATA

Page of Pages

AIRWAY NO. OR ROUTE	FROM / TO	ROUTINE OR DOCKET NO.	CONTROLLING @ TERRAIN/OBSTRUCTION AND COORDINATES	MRA / MOCA	MAA / MEA	GNSS MEA	CHANGE OVER POINT	FIX MRA/MCA	REMARKS	FLIGHT INSPECTION DATES
Q502	NORFOLK, NE VOR/DME			20000	45000					3/12/03
	SIOUX FALLS, SD VORTAC				20000					
J345	LOST WAGES, NV VOR			23000	45000					6/10/03
	UP CREEK, CO VORTAC				23000					
V413	GOPHER, MN VORTAC		TOWER 2438@ 450345N/930822W TERRAIN 1290 445700N/921900W	5500	17,500	4000		*5500	*FLIGHT CHECK RESTRICTION ON FARMINGTON(FGT) VORTAC	ON FILE
	*WAGNR, MN INT			3400	5500					

DATE	OFFICE	TITLE	SIGNATURE
11/26/2002	AVN-XXX	MANAGER	

FAA FORM 8260 - 16 / October 2002 (computer generated)

FIGURE 8-3. TRANSMITTAL OF AIR WAYS/ROUTE DATA

APPENDIX 1.

FLIGHT PROCEDURES REFERENCES

APPENDIX 1. FLIGHT PROCEDURES REFERENCES

The following documents form the basic reference library for flight procedures activities.

ORDERS AND NOTICES

Number	Subject
1000.1	Policy Statement of the Federal Aviation Administration
1010.59	Omni-directional Approach Lighting System
1050.1	Policies and Procedures for Considering Environmental Impacts.
1720.23	Distribution of Aeronautical Charts and Related Flight Information Publications
1800.56	National Flight Standards Work Program Guidelines
5010.4	Airport Safety Data Program
5100.38	Airport Improvement Program (AIP) Handbook
6030.1	FAA Policy on Facility Relocations Occasioned by Airport Improvements or Changes
6030.18	Mobile Air Traffic Control, Navigational Aid, Communication and Power System
6030.20	Electrical Power Policy
6050.32	Spectrum Management Regulations and Procedures Manual
6560.10	Runway Visual Range (RVR)
6700.20	Non-Federal Navigational Aids and Air Traffic Control Facilities
6750.16	Siting Criteria for Instrument Landing Systems
6750.24	ILS and Ancillary Electronic Component Configuration and Performance Requirement
6750.49	Maintenance of Instrument Landing Systems (ILS) Facilities
6850.2	Visual Guidance Lighting Systems
6850.5	Maintenance of Lighted Navigational Aids.
6950.2	Electrical Power Policy Implementation at National Airspace System Facilities
6980.12	Provision of Remote Monitor for Electrical Power and/or Remote Start of Engine Generators
6980.26	Battery Backup Power Systems - Theory and Selection Guidelines
7031.2	Airway Planning Standards #1 Terminal Air Navigation Facilities and ATC Services
7031.3	Airway Planning Standards #2 Air Route Traffic Control
7032.5	Airport Surface Detection Equipment (ASDE-3) Air Traffic Service Operational Requirements
7100.9	Standard Terminal Arrival (STAR)
7110.10	Flight Services
7110.19	Designation Taxiways as Temporary Runways
7110.22	Arrival and Departure Handling of High Performance Aircraft
7110.65	Air Traffic Control
7110.79	Charted Visual Flight Procedures
7130.3	Holding Pattern Criteria
AT 7130.8	Development of Holding Pattern Criteria and Procedures
7210.3	Facility Operations and Administration
7210.37	En Route Minimum IFR Altitude (MIA) Sector Charts
7232.5	Reduced or Increased Operating Hours for ATCT's/Approach Control Facilities
7340.1	Contractions
7350.2	Air Traffic Operational Coding System
7350.7	Location Identifiers
7400.2	Procedures for Handling Airspace Matters
7450.1	Special Use Airspace Management System
7610.4	Special Military Operations
7900.2	Reporting of Electronic Navigation Aids and Communication Facilities Data to the NFDC
7900.5	Surface Weather Observing
7930.2	Notices to Airmen (NOTAM)
8200.1	United States Standard Flight Inspection Manual

ORDERS AND NOTICES (Continued)

8240.47	Determination of Instrument Landing System (ILS) Glidepath Angle, Reference Datum Heights (RDH)
8260.3	United States Standard for Terminal Instrument Procedures (TERPS)
VN 8260.4	ILS Obstacle Risk Analysis
8260.15	U.S. Army Terminal Instrument Procedures Service
8260.16	Airport Obstruction Surveys
8260.19	Flight Procedures and Airspace
8260.23	Calculation of Radio Altimeter Height
8260.26	Establishing and Scheduling Standard Instrument Procedure Effective Dates
8260.31	Foreign Terminal Instrument Procedures
8260.32	U.S. Air Force Terminal Instrument Procedures Service
8260.33	Instrument Approach Procedures Automation (IAPA) Program
8260.37	Heliport Civil Utilization of Collocated Microwave Landing System (MLS)
8260.38	Civil Utilization of Global Positioning System (GPS)
8260.40	Flight Management System (FMS) Instrument Procedures Development
8260.42	Helicopter Global Positioning System (GPS) Nonprecision Approach Criteria
8260.43	Flight Procedures Management Program
8260.44	Civil Utilization of Area Navigation (RNAV) Departure Procedures
8260.45	Terminal Arrival Area (TAA) Design Criteria
8260.46	Departure Procedure (DP) Program
8260.48	Area Navigation (RNAV) Approach Construction Criteria
8400.8	Procedures for Approval of Facilities for FAR Part 121 and Part 135 CAT III Operations
8400.10	Air Transportation Operations Inspector’s Handbook
8700.1	General Aviation Operations Inspector's Handbook

ADVISORY CIRCULARS

61-27	Instrument Flying Handbook
70-2	Airspace Utilization Considerations in the Proposed Construction, Alteration, Activation and Deactivation of Airports
70/7460-1	Obstruction Marking and Lighting
70/7460-2	Proposed Construction or Alteration of Objects that May Affect the Navigable Airspace
73-2	IFR Helicopter Operations in the Northeast Corridor
90-42	Traffic Advisory Practices at Airports Without Operating Control Towers
90-45	Approval of Area Navigation Systems for Use in the U.S. National Airspace System
90-80	Approval for Offshore Standard Approach Procedures (OSAP), Airborne Radar Approaches (ARA), and Helicopter En route Descent Areas (HEDA)
91-14	Altimeter Setting Sources
91-16	Category II Operations-General Aviation Airplanes
91-54	Automatic Reporting Systems-Altimeter Setting and Other Operational Data
97-1	Runway Visual Range (RVR)
120-28	Criteria for Approval of Category III Landing Weather Minima for Takeoff, Landing, and Rollout
120-29	Criteria for Approving Category I and Category II Landing Minima for FAR 121 Operators
150/5070-6	Airport Master Plans
150/5200-28	Notices to Airmen for Airport Operators
150/5300-13	Airport Design
150/5340-1	Standards for Airport Markings
150/5340-4	Installation Details for Runway Centerline and Touchdown Zone Lighting Systems
150/5340-14	Economy Approach Lighting Aids
150/5340-17	Standby Power for Non-FAA Airport Lighting Systems

ADVISORY CIRCULARS (Continued)

150/5340-18	Standards for Airport Sign Systems
150/5340-19	Taxiway Centerline Lighting Systems
150/5340-24	Runway and Taxiway Edge Lighting Systems
150/5340-26	Maintenance of Airport Visual Aid Facilities
150/5340-27	Air-to-Ground Radio Control of Airport Lighting Systems
150/5340-28	Precision Approach Path Indicator (PAPI) Systems
150/5390-2	Heliport Design
170-9	Criteria for Acceptance of Ownership and Servicing of Civil Aviation Interest(s) Navigational and Air Traffic Control Systems and Equipment
170-13	Approach Lighting System Configurations and Energy Conservation

TITLE 14, CODE OF FEDERAL REGULATIONS (CFR).

Part 1	Definitions and Abbreviations
Part 71	Designations of Class A, Class B, Class C, Class D, and Class E Airspace Areas; Airways; Routes; and Reporting Points
Part 73	Special Use Airspace
Part 77	Objects Affecting Navigable Airspace
Part 91	General Operating and Flight Rules
Part 93	Special Air Traffic Rules and Airport Traffic Patterns
Part 95	IFR Altitudes
Part 97	Standard Instrument Approach Procedures
Part 103	Ultralight Vehicles
Part 121	Operating Requirements: Domestic, Flag, and Supplemental Operations
Part 125	Certification and Operations: Airplanes Having a Seating Capacity of 20 or More Passengers or a Maximum Payload Capacity of 6,000 Pounds or More; and Rules Governing Persons on board Such Aircraft
Part 129	Operations: Foreign Air Carriers and Foreign Operators of U.S. - Registered Aircraft Engaged in Common Carriage
Part 135	Operating Requirements: Commuter and On Demand Operations and Rules Governing Persons on board such Aircraft
Part 139	Certification and Operations: Land Airports serving Certain Air Carriers
Part 150	Airport Noise Compatibility Planning
Part 152	Airport Aid Program
Part 157	Notice of Construction, Alteration, Activation and Deactivation of Airports
Part 161	Notice and Approval of Airport Noise and Access Restrictions
Part 170	Establishment and Discontinuance Criteria for Air Traffic Control Services and Navigational Facilities
Part 171	Non-Federal Navigation Facilities

OTHER PUBLICATIONS

Aeronautical Information Manual (AIM)
Airport Facility Directory
Airport Master Record - FAA Form 5010.1
Airspace Dockets
Area Charts
Graphics Notices and Supplemental Data
Low and High Altitude En Route Charts
National Flight Data Digest (NFDD)
National Plan of Integrated Airport System (NPIAS)
Digital Obstacle File

OTHER PUBLICATIONS (Continued)

OC Charts
Sectional and Terminal Area Charts
Transmittal Letters (Instrument Approach Procedures)
USGS Topographical Charts

APPENDIX 2.

OBSTACLE ACCURACY STANDARDS, CODES, AND SOURCES

APPENDIX 2. OBSTACLE ACCURACY STANDARDS, CODES, AND SOURCES

100. UNITED STATES NATIONAL MAP ACCURACY STANDARDS.

With a view to the utmost economy and expedition in producing maps which fulfill not only the broad needs for standard or principal maps, but also the reasonable particular needs of individual agencies, standards of accuracy for published maps are defined as follows:

a. Horizontal accuracy. For maps on publication scales larger than 1:20,000, not more than 10 percent of the points tested shall be in error by more than 1/30 inch, measured on the publication scale; for maps on publication scales of 1:20,000 or smaller, 1/50 inch. These limits of accuracy must apply in all cases to positions of well-defined points only. Well-defined points are those that are easily visible or recoverable on the ground, such as the following: monuments or markers, such as bench marks, property boundary monuments; intersections of roads, railroads, etc.; corners of large buildings or structures (or center points of small buildings); etc. In general, what is well defined will also be determined by what is able to be plotted on the scale of the map within 1/100 inch. Thus, while the intersection of two roads or property lines meeting at right angles would come within a sensible interpretation, identification of the intersection of such lines meeting at an acute angle would obviously not be practicable within 1/100 inch. Similarly, features not identifiable upon the ground within close limits are not to be considered as test points within the limits quoted, even though their positions may be scaled closely upon the map. In this class would come timber lines, soil boundaries, etc.

b. Vertical accuracy, as applied to contour maps on all publication scales, must be such that not more than 10 percent of the elevations tested must be in error more than one-half the contour interval. In checking elevations taken from the map, the apparent vertical error may be decreased by assuming a horizontal displacement within the permissible horizontal error for a map of that scale.

c. Map accuracy testing may be accomplished by comparing the positions of points whose locations or elevations are shown upon it with corresponding positions as determined by surveys of a higher accuracy. Tests must be made by the producing agency that must also determine which of its maps are to be tested and the extent of such testing.

d. Published maps meeting these accuracy requirements must note this fact on their legends as follows: **"This map complies with National Map Accuracy Standards."**

e. Published maps whose errors exceed those stated before must omit all mention of standard accuracy from their legends.

f. Enlargements. When a published map is a considerable enlargement of a map drawing (manuscript) or of a published map, that fact must be stated in the legend. For example, **"This map is an enlargement of a 1:20,000-scale map drawing,"** or **"This map is an enlargement of a 1:24,000-scale published map."**

g. Data Interchange. To facilitate ready interchange and use of basic information for map construction among all Federal map-making agencies, manuscript maps and published maps, wherever economically feasible and consistent with intended map use, must conform to latitude and longitude boundary size, being 15, 7.5, or 3-3/4 minutes of latitude and longitude.

101. ACCURACY CODES AND SOURCES.

a. Accuracy Codes. Allowable accuracy of vertical and horizontal data was originally determined by a joint DOD/DOC/DOT task group in 1979. Accuracy codes established by that task group are no longer documented on 8260-series forms. Instead, document the vertical and/or horizontal adjustment applied (see paragraph 860a(1)(g)).

HORIZONTAL

Code	Tolerance	
1	+20′	(6 m)
2	+50′	(15 m)
3	+100′	(30 m)
4	+250′	(75 m)
5	+500′	(150 m)
6	+1000′	(300 m)
7	+1/2 NM	(900 m)
8	+1 NM	(1800 m)
9	Unknown	

VERTICAL

Code	Tolerance	
A	+3′	(1 m)
B	+10′	(3 m)
C	+20′	(6 m)
D	+50′	(15 m)
E	+125′	(38 m)
F	+250′	(75 m)
G	+500′	(150 m)
H	+1000′	(300 m)
I	Unknown	

b. Sources. The task group was provided specified accuracies from each of the following sources:

(1) Department of Commerce. Charting information is verified and published by the National Ocean Service (NOS).

(a) Airport Obstruction Chart (OC) obstacle accuracies quoted by NOS are:

1. Flightpath and transitional areas +20′ (6 m) horizontally and +2′ (1 m) vertically out to 20,000′ (6100m). **Code 1A.**

2. Flightpath and transitional area +40′ (12 m) horizontally and +20′ (6 m) vertically beyond 20,000′ (6100 m). **Code 2C.**

3. Horizontal surface area +20′ (6 m) horizontally and +5′ (1.5 m) vertically. **Code 1B.**

4. Conical surface +40′ (12 m) horizontally and +20′ (6 m) vertically**. Code 2C**

5. Radio and TV towers +20-40′ (6-12m) horizontally, as in paragraphs 101b(1)(a)1 and 2, but +40′ (12 m) horizontally and +10′ (3 m) vertically if not surveyed for an OC chart. **Code 2B.** (Radio and TV towers are accurate vertically to +2′ (.6 m) anywhere on the OC survey if they penetrate a surface). **Code 2A.**

(2) Department of Defense.

(a) National Imaging and Mapping Agency (NIMA):

1. **Digital Terrain Elevation Data (DTED) (Level 0)** 1 kilometer postings from 1:350,000 charts, +500′ (150 m) horizontally and +100′ (30 m) vertically **Code 5E. DTED (Level 1),** 100 meter postings +50 m (164′) horizontally and +30 m (98) vertically. **Code 4E**. **DTED (Level 2),** 30 meter postings +50 m (164′) horizontally and +30 m (98) vertically. **Code 4E**.

2. **Shuttle Radar Terrain Model (SRTM):** Level 1 (Foreign) 90 meter posting, equivalent to 1:250,000. Level 2 (CONUS) 30 meter posting, equivalent to 1:50,000. Level 1 and 2 accuracies are 20 meter horizontal and 16 meter vertical. **Code 3C.**

3. **Digital Vertical Obstruction File (DVOF).** Populated using multiple sources. Obstruction attributes contain associated source accuracy code (Surveyed to Reported). **Code 5E.**

4. **Joint Operations Graphic (JOG) - AIR**, 2nd Series, (1:250,000 scale), +500′ (150 m) horizontally and +125′ (38 m) vertically. **Code 5E**.

5. **Topographical Line Maps (TLM)**, (1:50,000 and 1:100,000 scale), +50′ (15 m) horizontally and +20′ (6 m) vertically. **Code 2C.**

(b) OC surveys conducted by U.S. Army Topographic Units must have the same accuracy standards as those developed by the Department of Commerce (see paragraph 101b(1)(a)). **Code 2C.**

(3) Department of Transportation. FAA obstacle data for terrain structures are recorded on airspace, airport, and procedures records. If the original source is Obstruction Clearance (OC) or

aero charts, accuracies in paragraph 101b(1)(a) are appropriate. Other accuracies are as follows:

(a) Field inspections that employ a theodolite, +50′ (15 m) horizontally and +20′ (6 m) vertically. **Code 2C.**

(b) Obstruction evaluations: All obstacles, +250′ (75 m) horizontally and +50′ (15 m) vertically, unless verified to a higher accuracy. **Code 4D.**

(c) Quarterly Obstacle Memo - Digital Obstacle File, depending upon data source, from +20′ (6 m) to +1 NM (1800 m) horizontally, and from +3′ (1 m) to +1,000′ (300 m) vertically. **Code 1A to 8H.**

(d) Airport Field Offices (AFO) may assign their own codes to obstacles on engineering drawings and Airport Layout Plans (ALP) furnished to Regional Airports Division.

(e) Airway Facility (AF) Division Field Survey; navigation aids, +20′ (6 m) horizontally and 3′ (1 m) vertically. **Code 6E.** Other obstacles, +50′ (15 m) horizontally and +10′ (3 m) vertically, unless verified to a higher accuracy. **Code 2B.**

(f) Flight inspection fly-by (see Order 8200.1, paragraph 214.3), +250′ (75 m) horizontally and +50′ (15 m) vertically. **Code 4D.**

(g) Estimated by airport owner or operator, +1/2 NM (900 m) horizontally and +500′ (150 m) vertically. **Code 7G.**

(h) World Aeronautical Chart (WAC), Sectional Chart, and VFR Terminal Chart.

1. Terrain features which are not marked as spot elevations:

Chart	Horizontal	Vertical*
WAC	+1700′ (500 m)	+500′ (150 m)
Sec	+900′ (275 m)	+250′ (75 m)
VFR	+500′ (150 m)	+250′ (75 m)

*1/2 contour line

2. When **obstacles or mountain peaks** are specifically marked by a spot elevation, the vertical accuracy changes to +3′ (1 m) or the full contour interval depending on source. Horizontal accuracy determined by chart type as specified in paragraph 101a.

3. When these charts are used to **establish coordinates**, it must be recognized that the Inter-Agency Air Cartographic Committee (IACC) charting standards permit displacement of objects to provide for relative depiction. To account for these additional errors, the horizontal accuracy factors must be **doubled** for manmade obstacles depicted on WAC, Sectional, and VFR charts.

(4) Department of Interior. U.S. Geological Survey data in magnetic tape files are claimed to be accurate to +1,000′ (300 m) horizontally and +100′ (30 m) vertically. **Code 6E.** For the following charts, when obstacles or mountain peaks are specifically marked by a spot elevation, the vertical accuracy changes to +3′ (1 m). Otherwise, these charts have the following accuracies:

(a) Topographical charts (1:250,000 scale), +1,000′ (300 m) horizontally and +100′ (30 m) vertically. **Code 6E.**

(b) Topographical charts (1**:62,500 or 1:63,360 scale),** +150′ (75 m) horizontally and +50′ (15 m) vertically. **Code 4D.**

(c) Topographical charts [**1:20,000, 1:24,000) (7 1/2 min. Quad series), and** 1:25,000], +40′ (12 m) horizontally and +20′ (6 m) vertically. **Code 2C**.

(d) Topographical charts (1:100,000 scale), +40′ (12 m) horizontally and +20′ (6 m) vertically.

(5) Digital Elevation Data. U.S. Geological Survey data for terrain elevations is typically based on Digital Elevation Models (DEM). Source documentation from the NOS supports the following horizontal and vertical accuracies; these values must be used in instrument procedure construction:

(a) DEM 7.5 Minute (Level 1), +13 m (43′) horizontally and +14 m (46′) vertically.

(b) DEM 7.5 Minute (Level 2), +13 m (43′) horizontally and +17 m (56′) vertically.

(c) DEM 1 Degree (1:250,000 scale), +130 m (427′) horizontally and +30 m (98′) vertically.

APPENDIX 3.

DATA WORKSHEET FOR FAA FORM 8260-2,

RADIO FIX AND HOLDING DATA RECORD

APPENDIX 3. 8260-2, DATA WORKSHEET

Instructions for completing 8260-2, Data Worksheet, for proponents OTHER than the NFPO.

BLOCK 1. REQUESTED PUBLICATION DATE. Enter the desired effective date that coincides with the charting cycle (see Order 8260.26, appendix 1). If the Form 8260-2 request is to be in conjunction with an airspace action, obtain the docket number from the regional Airspace Branch (AXX-520). For Form 8260-2 requests, allow at least 20 weeks lead-time from the desired effective date.

BLOCK 2. FIX NAME. Enter the 5-character pronounceable name obtained from ARTCC. Do not include "WP" as part of the name.

BLOCK 3. FIX TYPE. Indicate the type of fix; e.g. radar, WP (a geographical position), DME (fixes made up of a single radial/bearing and DME, or multiple DMEs), VHF (fixes made up of 2 VOR radials), VHF/LF (fixes made up of a VOR radial and an NDB bearing). Indicate all combinations that make up the fix.

BLOCK 4. LOCATION. Latitude and longitude accurate to the hundredth of a second; e.g., 09.25 sec. NAVAID radial/bearing/distance values must also be entered to the appropriate hundredth value; e.g., 347.23°; 08.37NM.

BLOCK 5. TYPE OF ACTION REQUIRED. Check applicable box to Establish, Modify, or Cancel the fix.

BLOCK 6. HOLDING. Describe holding patterns required at fix. When climb-in-holding is required, provide detailed holding instructions including maximum altitude and maximum speed (if other than standard).

BLOCK 7. CHARTING. Indicate required charting; i.e., terminal, SIDs, STARs, or en route charts.

BLOCK 8. REMARKS. List all procedures which use the fix and other uses of the fix; e.g., reporting points, etc. Include any other information that may assist in developing the fix. Justify the requirement for other than routine processing and charting.

BLOCK 9. POINT-OF-CONTACT (POC). Self explanatory.

Form 8260-2, DATA Worksheet

1. REQUESTED PUBLICATION DATE: _____

2. FIX NAME: _____

3. FIX TYPE: _____

4. LOCATION: _____

5. TYPE OF ACTION REQUIRED: **Establish** ☐ **Modify** ☐ **Cancel** ☐

6. HOLDING: _____

_____

7. CHARTING: _____

8. REMARKS (Use additional paper if required):

---

9. POINT OF CONTACT (POC):

ATC Facility Name.

POC's Name.

Telephone Number.

FAX Number.

E-Mail Address.

APPENDIX 4. RADIO FIX

AND HOLDING DATA RECORD,

FAA Form 8260-2

RADIO FIX AND HOLDING DATA RECORD

AIRSPACE DOCKET	FIX						LOCATION
	NAME			WP		RADAR	
01-ANM-238	XMPLE		X	DME	X	VHF	CO / US
				CNF		LF	

1. RADIO FIX	TYPE OF ACTION (*check one*)		ESTABLISH		CANCEL
		X	MODIFY		NO CHANGE

A. FACILITY TYPE	FACILITY 1	FACILITY 2	FACILITY 3
NAME	FALCON (FQF)	KREMMLING (RLG)	JEFFCO (BJC)
CLASS/TYPE	H-VORTAC	H-VOR/DME	H-VOR/DME
RADIAL/COURSE/BEARING (from)	254.46 (265.46)	125.28 (139.28)	233.71 (244.71)
DME DISTANCE (from)	67.48	56.07	-
MRA/MAA	165/175	165/175	165/175

B. DISTANCE FROM FACILITY: 67 LEAST DIVERGENCE ANGLE: 54

C. AIR/GROUND COMMUNICATIONS	WITH	SATISFACTORY ON			AT
	DEN APP CON ZDV			HF	
			X	VHF	16500 MSL(MHA)
			X	UHF	

D. MRA OF OTHER FACILITIES AT THIS FIX	FACILITY	TYPE/CLASS	RADIAL CRS	DME	MRA/MAA	CHECKED BY	DATE
	DBL	H-VOR/DME	064.93	42.93	165 / 180		
	SXW	T-VOR/DME	080.04		165 / 180		

E. AUTHORIZED USE OF THIS FIX

AIRSPACE	COMPULSORY	ON REQUEST	HOLDING	ALT. CHANGE	ARRIVAL	DEPARTURE	FLAG REQ'D
LOW		X	X	X	X		X
HIGH							

FLAG NOTE: MRA V328 16500 SE MRA V134 16500 W

F. RADIO FIX IS (*check one*)		APPROVED		DISAPPROVED	X	RESTRICTED
2. HOLDING	TYPE OF ACTION (*check one*)			ESTABLISH		CANCEL
			X	MODIFY		NO CHANGE

A. HOLDING REQUIRED

PAT.	DIRECTION	IDENT	TYPE	RAD/CRS/BRG	CRS INBOUND	TURN (L OR R)	TIME / DME OUTBOUND
1	W	FQF	VORTAC	254.46	074.46	R	1 1/2 / -
2	NW	RLG	VOR/DME	125.28	125.28	L	1 1/2 / -

B. HOLDING ALTITUDES

PATTERN	265 K				
1	165/175				
2	165/175				

C. REASON FOR NONSTANDARD HOLDING: TERRAIN

D. HOLDING IS (*check one*)		APPROVED		DISAPPROVED	X	RESTRICTED

3. REMARKS:

FALCON VORTAC AND KREMMLING VDME USED TO ESTABLISH FIX COORDINATES.
HOLDING LIMITED TO ESTABLISHED PATTERNS.
FIX USE:
ENROUTE:
V134, V328
SIAPS:
EAGLE, CO - VOR RWY 27 (FAC 1, 2, PAT 1)
STARS:
DENVER, CO - MOUNTAIN ARRIVAL

LAT/LONG: 393551.88N / 1055934.70W

FAA FORM 8260 - 2 / MARCH 2003 (computer generated) PAGE 1 OF 2

Figure A4-1

4. AIR TRAFFIC REQUESTS APPROVAL OF REFERENCED FIX FOR:	NAME: XMPLE, CO

A. REPORTING POINT		COMPULSORY	AIRSPACE STRUCTURE FOR WHICH FIX IS DESIRED	X	LOW ALTITUDE
	X	ON REQUEST			HIGH ALTITUDE

B. HOLDING

PAT.	SPEED	AIRSPACE		SPEED	AIRSPACE		SPEED	AIRSPACE		SPEED	AIRSPACE	
	265 K	L	H		L	H		L	H		L	H
1	165/175	18										
2	165/175	18										

C. HOLDING AREAS		YES	NO
	COMPLETELY WITHIN CONTROLLED AIRSPACE (*if answer is "NO" indicate Air Traffic action required in item 3 "REMARKS"*)	X	
	CLEAR OF RESTRICTED / WARNING AREAS	X	

5. CHART PUBLICATION	X	REQUIRED
		NOT REQUIRED

		AREA	DP	STAR	JAL	AL	CONTROLLER	E/R LOW	E/R HIGH
FIX	PRESENT	X		X				X	
	REQUESTED	X		X		X	X	X	
HOLDING	PRESENT								
	REQUESTED					X	X		

6. ATC COORDINATION	DATE: 5/20/2002	FACILITY: ZDV	NAME: T. N. MOVER

7. CONTROLLING OBSTRUCTIONS

PATTERN	AIRCRAFT	OBSTRUCTION	COORDINATES	ELEVATION(msl)	TEMPLATE	DETERMINATION
1	265	TOWER (06-0481)	390527.00/1081322.00	10023 (4D)	P-18	IAPA & MAP STUDY
2	265	200' AAO	393609.87/1060057.21	13987 (4D)	P-18	IAPA & MAP STUDY

8. FLIGHT INSPECTION:

	LOW ALTITUDE	HIGH ALTITUDE
OFFICE	AVN-200	
VALIDATION DATES	DATE ON FILE	

9. REVISION RECORD

REVISION NO.	DATE OF REVISION:
4	8/10/2002
SUPERSEDES:	DATED:
3	5/11/2000

10. REASON FOR REVISION:
FACILITY 3 TYPE CHANGED FROM VOR TO VOR/DME.
ADDED HOLDING PATTERN 2.
UPDATED FIX USE.

11. INITIATED BY:	DATE: 6/11/2002	ORGANIZATION: SEA FPO		NAME: BUER A. CRAT	
12. DEVELOPED BY:	DATE: 6/12/2002	OFFICE: AVN-110		NAME: MARVIN E. WHITE	
13. AVN APPROVAL	DATE: 8/10/2002	BRANCH: AVN-110	NAME: JOHN BICKERSTAFF		SIGNATURE:
14. DISTRIBUTION	NFDC: ATA-110	FPO: SEA	ARTCC: ZDV, ZLC	APP CON / ATCT: DEN APP CON	FICO: AVN-250 / OTHER:

PAGE 2 OF 2

Figure A4-2

RADIO FIX AND HOLDING DATA RECORD

AIRSPACE DOCKET	FIX						LOCATION
	NAME		WP		RADAR		
	NITER OM	X	DME	X	VHF		TX / US
			CNF		LF		

1. RADIO FIX	TYPE OF ACTION (*check one*)		ESTABLISH		CANCEL
		X	MODIFY		NO CHANGE

A. FACILITY TYPE	FACILITY 1	FACILITY 2	FACILITY 3
NAME	NITER (DA)	DALLAS (I-DAL)	MAVERICK (TTT)
CLASS/TYPE	OM	LOC/DME	H-VOR/DME
RADIAL/COURSE/BEARING (from)	-	NW CRS (315.64)	064.72 (070.72)
DME DISTANCE (from)	-	5.58	-
MRA/MAA	19/50	19/50	19/50

B. DISTANCE FROM FACILITY: 7 LEAST DIVERGENCE ANGLE: 65

C. AIR/GROUND COMMUNICATIONS	WITH	SATISFACTORY ON			AT
	DAL APP CON DAL TOWER			HF	
			X	VHF	1900 MSL(MHA)
			X	UHF	

D. MRA OF OTHER FACILITIES AT THIS FIX	FACILITY	TYPE/CLASS	RADIAL CRS	DME	MRA/MAA	CHECKED BY	DATE

E. AUTHORIZED USE OF THIS FIX

AIRSPACE	COMPULSORY	ON REQUEST	HOLDING	ALT. CHANGE	ARRIVAL	DEPARTURE	FLAG REQ'D
LOW		X		X	X		
HIGH							

FLAG NOTE:

F. RADIO FIX IS (*check one*)	X	APPROVED		DISAPPROVED		RESTRICTED
2. HOLDING	TYPE OF ACTION (*check one*)			ESTABLISH		CANCEL
				MODIFY	X	NO CHANGE

A. HOLDING REQUIRED

PAT.	DIRECTION	IDENT	TYPE	RAD/CRS/BRG	CRS INBOUND	TURN (L OR R)	TIME / DME OUTBOUND

B. HOLDING ALTITUDES

PATTERN					

C. REASON FOR NONSTANDARD HOLDING:

D. HOLDING IS (*check one*)		APPROVED	X	DISAPPROVED		RESTRICTED

3. REMARKS:

DAL ILS DME ANTENNA COORDINATES: 325025.01N-0965009.33W.
COORDINATES REFLECT LOCATION ON LOC/AZ CENTERLINE ABEAM THE NITER MB.
ACTUAL FACILITY LOCATION IS 325424.46N / 0965448.42W.
FIX USE:
SIAPS:
DALLAS, TX - DALLAS-LOVE FIELD - ILS RWY 13L

LAT/LONG: 325423.25N / 0965449.89W

FAA FORM 8260 - 2 / MARCH 2003 (computer generated) PAGE 1 OF 2

Figure A4-3

4. AIR TRAFFIC REQUESTS APPROVAL OF REFERENCED FIX FOR:	NAME: NITER OM, TX

A. REPORTING POINT		COMPULSORY	AIRSPACE STRUCTURE FOR WHICH FIX IS DESIRED	X	LOW ALTITUDE
	X	ON REQUEST			HIGH ALTITUDE

B. HOLDING

PAT.	SPEED	AIRSPACE		SPEED	AIRSPACE		SPEED	AIRSPACE		SPEED	AIRSPACE	
		L	H		L	H		L	H		L	H

C. HOLDING AREAS	COMPLETELY WITHIN CONTROLLED AIRSPACE (*if answer is "NO" indicate Air Traffic action required in item 3 "REMARKS"*)	YES	NO
	CLEAR OF RESTRICTED / WARNING AREAS		

5. CHART PUBLICATION	X	REQUIRED
		NOT REQUIRED

		AREA	DP	STAR	JAL	AL	CONTROLLER	E/R LOW	E/R HIGH
FIX	PRESENT					X			
	REQUESTED					X	X		
HOLDING	PRESENT								
	REQUESTED								

6. ATC COORDINATION	DATE: 4/18/2001	FACILITY: DAL ATCT	NAME: INA TOWER

7. CONTROLLING OBSTRUCTIONS

PATTERN	AIRCRAFT	OBSTRUCTION	COORDINATES	ELEVATION(msl)	TEMPLATE	DETERMINATION

8. FLIGHT INSPECTION:

	LOW ALTITUDE	HIGH ALTITUDE
OFFICE	AVN-200	
VALIDATION DATES	DATE ON FILE	

9. REVISION RECORD

REVISION NO.	DATE OF REVISION:
3	2/10/2002
SUPERSEDES:	DATED:
2	7/15/2000

10. REASON FOR REVISION:
ADDED DME TO I-DAL LOC.
ADDED DME ANTENNA COORDINATE REMARK.

11. INITIATED BY:	DATE: 5/22/2001	ORGANIZATION: FTW FPO		NAME: FRED STAFFER	
12. DEVELOPED BY:	DATE: 11/24/2001	OFFICE: AVN-110		NAME: MARVIN E. WHITE	
13. AVN APPROVAL	DATE: 2/10/2002	BRANCH: AVN-110	NAME: JOHN BICKERSTAFF		SIGNATURE:
14. DISTRIBUTION	NFDC: ATA-110	FPO: FTW	ARTCC: ZFW	APP CON / ATCT: DAL APP CON	FICO: AVN-250	OTHER: DAL ATCT

PAGE 2 OF 2

Figure A4-4

RADIO FIX AND HOLDING DATA RECORD

AIRSPACE DOCKET	FIX						LOCATION
	NAME	X	WP		RADAR		
	THSWA		DME		VHF		MO / US
			CNF		LF		

1. RADIO FIX	TYPE OF ACTION (*check one*)	X	ESTABLISH		CANCEL
			MODIFY		NO CHANGE
A. FACILITY TYPE	FACILITY 1				
NAME	MARVN				
CLASS/TYPE	-				
RADIAL/COURSE/BEARING (from)	(058.35)				
DME DISTANCE (from)	5.00				
MRA/MAA	- /175				

B. DISTANCE FROM FACILITY:		LEAST DIVERGENCE ANGLE:				
C. AIR/GROUND COMMUNICATIONS	WITH MKC TOWER ZKC	SATISFACTORY ON		HF	AT 3000 MSL(MHA)	
			X	VHF		
			X	UHF		

D. MRA OF OTHER FACILITIES AT THIS FIX	FACILITY	TYPE/CLASS	RADIAL CRS	DME	MRA/MAA	CHECKED BY	DATE

E. AUTHORIZED USE OF THIS FIX

AIRSPACE	COMPULSORY	ON REQUEST	HOLDING	ALT. CHANGE	ARRIVAL	DEPARTURE	FLAG REQ'D
LOW		X		X	X		
HIGH							

FLAG NOTE:

F. RADIO FIX IS (*check one*)	X	APPROVED		DISAPPROVED		RESTRICTED
2. HOLDING	TYPE OF ACTION (*check one*)			ESTABLISH		CANCEL
				MODIFY		NO CHANGE

A. HOLDING REQUIRED

PAT.	DIRECTION	IDENT	TYPE	RAD/CRS/BRG	CRS INBOUND	TURN (L OR R)	TIME / DME OUTBOUND

B. HOLDING ALTITUDES

PATTERN					

C. REASON FOR NONSTANDARD HOLDING:

D. HOLDING IS (*check one*)		APPROVED	X	DISAPPROVED		RESTRICTED

3. REMARKS:

FIX USE:
SIAPS:
MARYVILLE, MO - RNAV (GPS) RWY 32

LAT/LONG: **401504.01N / 0944223.05W**

FAA FORM 8260 - 2 / MARCH 2003 (computer generated) **PAGE 1 OF 2**

Figure A4-5

4. AIR TRAFFIC REQUESTS APPROVAL OF REFERENCED FIX FOR:	NAME: THSWA, MO

A. REPORTING POINT		COMPULSORY	AIRSPACE STRUCTURE FOR WHICH FIX IS DESIRED	X	LOW ALTITUDE
	X	ON REQUEST			HIGH ALTITUDE

B. HOLDING

PAT.	SPEED	AIRSPACE L	AIRSPACE H	SPEED	AIRSPACE L	AIRSPACE H	SPEED	AIRSPACE L	AIRSPACE H	SPEED	AIRSPACE L	AIRSPACE H

C. HOLDING AREAS		YES	NO
	COMPLETELY WITHIN CONTROLLED AIRSPACE (*if answer is "NO" indicate Air Traffic action required in item 3 "REMARKS"*)		
	CLEAR OF RESTRICTED / WARNING AREAS		

5. CHART PUBLICATION	X	REQUIRED
		NOT REQUIRED

		AREA	DP	STAR	JAL	AL	CONTROLLER	E/R LOW	E/R HIGH
FIX	PRESENT								
	REQUESTED					X			
HOLDING	PRESENT								
	REQUESTED								

6. ATC COORDINATION	DATE: 8/17/2002	FACILITY: ZKC	NAME: SPOOF HOUND

7. CONTROLLING OBSTRUCTIONS

PATTERN	AIRCRAFT	OBSTRUCTION	COORDINATES	ELEVATION(msl)	TEMPLATE	DETERMINATION

8. FLIGHT INSPECTION:

	LOW ALTITUDE	HIGH ALTITUDE
OFFICE	AVN-200	
VALIDATION DATES	2/13/2003	

9. REVISION RECORD

REVISION NO.	DATE OF REVISION:
ORIG	3/2/2003
SUPERSEDES:	DATED:

10. REASON FOR REVISION:

11. INITIATED BY:	DATE: 8/28/2002	ORGANIZATION: CHI FPO		NAME: F. LIM FLAM	
12. DEVELOPED BY:	DATE: 11/11/2002	OFFICE: AVN-110		NAME: MARVIN E. WHITE	
13. AVN APPROVAL	DATE: 3/2/2003	BRANCH: AVN-110	NAME: JOHN BICKERSTAFF		SIGNATURE:
14. DISTRIBUTION	NFDC: ATA-110	FPO: CHI	ARTCC: ZKC	APP CON / ATCT: MKC TOWER	FICO: AVN-250 / OTHER:

PAGE 2 OF 2

Figure A4-6

RADIO FIX AND HOLDING DATA RECORD

AIRSPACE DOCKET	FIX						LOCATION
	NAME	X	WP		RADAR		
	HOWTO	X	DME	X	VHF		MA / US
			CNF		LF		

1. RADIO FIX	TYPE OF ACTION (*check one*)		ESTABLISH		CANCEL
		X	MODIFY		NO CHANGE

A. FACILITY TYPE	FACILITY 1	FACILITY 2	FACILITY 3
NAME	NORWICH (ORW)	HARTFORD (HFD)	KIJD R27
CLASS/TYPE	L-VOR/DME	L-VOR/DME	-
RADIAL/COURSE/BEARING (from)	011.47 (357.47)	277.31 (264.31)	(117.48)
DME DISTANCE (from)	7.58	-	8.28
MRA/MAA	30/175	30/175	- /175

B. DISTANCE FROM FACILITY: 24 LEAST DIVERGENCE ANGLE: 86

C. AIR/GROUND COMMUNICATIONS	WITH	ZBW	SATISFACTORY ON		HF	AT	3000	MSL(MHA)
				X	VHF			
				X	UHF			

D. MRA OF OTHER FACILITIES AT THIS FIX

FACILITY	TYPE/CLASS	RADIAL CRS	DME	MRA/MAA	CHECKED BY	DATE
PUT	H-VOR/DME	218.10	17.91	30 / 175		

E. AUTHORIZED USE OF THIS FIX

AIRSPACE	COMPULSORY	ON REQUEST	HOLDING	ALT. CHANGE	ARRIVAL	DEPARTURE	FLAG REQ'D
LOW		X	X	X	X	X	X
HIGH							

FLAG NOTE: **MRA 3000**

F. RADIO FIX IS (*check one*)		APPROVED		DISAPPROVED	X	RESTRICTED
2. HOLDING	TYPE OF ACTION (*check one*)			ESTABLISH		CANCEL
			X	MODIFY		NO CHANGE

A. HOLDING REQUIRED

PAT.	DIRECTION	IDENT	TYPE	RAD/CRS/BRG	CRS INBOUND	TURN (L OR R)	TIME / DME OUTBOUND
1	S	ORW	VOR/DME	011.47	011.47	R	1 / -
2	NW	-	WP	297.48	117.48	R	- / 4

B. HOLDING ALTITUDES

PATTERN	175 K	200 K	230 K		
1	30/80				
2		30/60	60/140		

C. REASON FOR NONSTANDARD HOLDING:

D. HOLDING IS (*check one*)		APPROVED		DISAPPROVED	X	RESTRICTED

3. REMARKS:

PAT 1 CHART 175K ICON.
HOLDING LIMITED TO ESTABLISHED PATTERNS.
MINIMUM TURNING ALTITUDE: AIRCRAFT PROCEEDING HFD V3-167 HOWTO V14 MOGUL MUST MAINTAIN 3500 OR HIGHER UNTIL ESTABLISHED ON CENTERLINE OF V14 NORTHBOUND.
FIX USE:
DP:
PROVIDENCE, RI - PROVIDENCE DEPARTURE
ENROUTE:
V3, V14, V167
SIAPS:
WILLIMANTIC, CT - RNAV (GPS) RWY 27 (PAT 2)

LAT/LONG: **414057.85N / 0720024.37W**

FAA FORM 8260 - 2 / MARCH 2003 (computer generated) PAGE 1 OF 2

Figure A4-7

4. AIR TRAFFIC REQUESTS APPROVAL OF REFERENCED FIX FOR:	NAME: HOWTO, MA

A. REPORTING POINT		COMPULSORY	AIRSPACE STRUCTURE FOR WHICH FIX IS DESIRED	X	LOW ALTITUDE
	X	ON REQUEST			HIGH ALTITUDE

B. HOLDING

PAT.	SPEED 175 K	AIRSPACE L	AIRSPACE H	SPEED 200 K	AIRSPACE L	AIRSPACE H	SPEED 230 K	AIRSPACE L	AIRSPACE H	SPEED	AIRSPACE L	AIRSPACE H
1	30/80	4										
2				30/60	5		60/140	8				

C. HOLDING AREAS		YES	NO
	COMPLETELY WITHIN CONTROLLED AIRSPACE (*if answer is "NO" indicate Air Traffic action required in item 3 "REMARKS"*)	X	
	CLEAR OF RESTRICTED / WARNING AREAS	X	

5. CHART PUBLICATION	X	REQUIRED
		NOT REQUIRED

		AREA	DP	STAR	JAL	AL	CONTROLLER	E/R LOW	E/R HIGH
FIX	PRESENT		X			X		X	
	REQUESTED		X			X		X	
HOLDING	PRESENT					X		X	
	REQUESTED					X		X	

6. ATC COORDINATION	DATE: 10/12/2002	FACILITY: BOS APP CON	NAME: SEYMOUR BLIPS

7. CONTROLLING OBSTRUCTIONS

PATTERN	AIRCRAFT	OBSTRUCTION	COORDINATES	ELEVATION(msl)	TEMPLATE	DETERMINATION
1	175	200' AAO	414056.45/0720102.89	892 (4D)	P-4	IAPA & MAP STUDY
2	200 230	TOWER (22-0087) 200' AAO	414014.00/0700131.00 414100.03/0720025.07	318 (2C) 2568 (2C)	P-4 P-5	IAPA & MAP STUDY

8. FLIGHT INSPECTION:	LOW ALTITUDE	HIGH ALTITUDE
OFFICE	AVN-200	
VALIDATION DATES	DATE ON FILE	

9. REVISION RECORD	
REVISION NO. 7	DATE OF REVISION: 1/31/2003
SUPERSEDES:	DATED:

10. REASON FOR REVISION:
ADDED WAYPOINT FIX TYPE.
ADDED FACILITY 3 FOR WAYPOINT.
ADDED HOLDING PATTERN 2.
UPDATED FIX USE.

11. INITIATED BY:	DATE: 11/16/2002	ORGANIZATION: NEW ENGLAND REGION	NAME: PAUL REVERE IV		
12. DEVELOPED BY:	DATE: 12/5/2002	OFFICE: AVN-110	NAME: MARVIN E. WHITE		
13. AVN APPROVAL	DATE: 1/31/2003	BRANCH: AVN-110	NAME: BRADLEY W. RUSH	SIGNATURE:	
14. DISTRIBUTION	NFDC: ATA-110	FPO: BOS	ARTCC: ZBW	APP CON / ATCT: BOS APP CON	FICO: AVN-250	OTHER:

PAGE 2 OF 2

Figure A4-8

RADIO FIX AND HOLDING DATA RECORD

AIRSPACE DOCKET	FIX						LOCATION
	NAME		WP	X	RADAR		
	DEMOH	X	DME	X	VHF		IN / US
			CNF		LF		

1. RADIO FIX	TYPE OF ACTION (*check one*)	X	ESTABLISH		CANCEL
			MODIFY		NO CHANGE

A. FACILITY TYPE	FACILITY 1	FACILITY 2	FACILITY 3
NAME	SAMSVILLE (SAM)	POCKET CITY (PXV)	KLWV R36
CLASS/TYPE	L-VOR/DME	H-VORTAC	-
RADIAL/COURSE/BEARING (from)	083.15 (086.15)	013.00 (016.00)	-
DME DISTANCE (from)	25.33	36.42	14.67
MRA/MAA	30/175	30/175	30/175

B. DISTANCE FROM FACILITY: 36 LEAST DIVERGENCE ANGLE: 70

C. AIR/GROUND COMMUNICATIONS	WITH	SATISFACTORY ON			AT	
	HUF TOWER ZID			HF	3000	MSL(MHA)
			X	VHF		
			X	UHF		

D. MRA OF OTHER FACILITIES AT THIS FIX	FACILITY	TYPE/CLASS	RADIAL CRS	DME	MRA/MAA	CHECKED BY	DATE

E. AUTHORIZED USE OF THIS FIX

AIRSPACE	COMPULSORY	ON REQUEST	HOLDING	ALT. CHANGE	ARRIVAL	DEPARTURE	FLAG REQ'D
LOW		X	X	X	X		X
HIGH							

FLAG NOTE: **MCA V7 3500**

F. RADIO FIX IS (*check one*)		APPROVED		DISAPPROVED	X	RESTRICTED
2. HOLDING	TYPE OF ACTION (*check one*)		X	ESTABLISH		CANCEL
				MODIFY		NO CHANGE

A. HOLDING REQUIRED

PAT.	DIRECTION	IDENT	TYPE	RAD/CRS/BRG	CRS INBOUND	TURN (L OR R)	TIME / DME OUTBOUND
1	W	SAM	VOR/DME	083.15	083.15	R	1-1 1/2 / -

B. HOLDING ALTITUDES

PATTERN	200 K	230 K	265 K		
1	30/60	60/140	140/175		

C. REASON FOR NONSTANDARD HOLDING:

D. HOLDING IS (*check one*)		APPROVED		DISAPPROVED	X	RESTRICTED

3. REMARKS:

UNPLANNED HOLDING AUTHORIZED AT OR ABOVE 5000.
CLIMB IN HOLD EVALUATED (310K).
PRIOR COORDINATION REQUIRED WITH ZID FOR HOLDING IN RED HILLS MOA.
FIX USE:
ENROUTE:
V7, V44
SIAPS:
VINCENNES, IN - VOR-A
LAWRENCEVILLE, IL - VOR RWY 36

LAT/LONG: **383044.32N / 0873257.08W**

FAA FORM 8260 - 2 / MARCH 2003 (computer generated) **PAGE 1 OF 2**

Figure A4-9

4. AIR TRAFFIC REQUESTS APPROVAL OF REFERENCED FIX FOR:	NAME: DEMOH, IN

A. REPORTING POINT		COMPULSORY	AIRSPACE STRUCTURE FOR WHICH FIX IS DESIRED	X	LOW ALTITUDE
	X	ON REQUEST			HIGH ALTITUDE

B. HOLDING

PAT.	SPEED	AIRSPACE		SPEED	AIRSPACE		SPEED	AIRSPACE		SPEED	AIRSPACE	
	200 K	L	H	230 K	L	H	265 K	L	H		L	H
1	30/60	6		60/140	11		140/175	17				

C. HOLDING AREAS		YES	NO
	COMPLETELY WITHIN CONTROLLED AIRSPACE (*if answer is "NO" indicate Air Traffic action required in item 3 "REMARKS"*)	X	
	CLEAR OF RESTRICTED / WARNING AREAS		X

5. CHART PUBLICATION	X	REQUIRED
		NOT REQUIRED

		AREA	DP	STAR	JAL	AL	CONTROLLER	E/R LOW	E/R HIGH
FIX	PRESENT								
	REQUESTED					X	X	X	
HOLDING	PRESENT								
	REQUESTED						X	X	

6. ATC COORDINATION	DATE: 2/28/2002	FACILITY: ZID	NAME: VICTOR VECTOR

7. CONTROLLING OBSTRUCTIONS

PATTERN	AIRCRAFT	OBSTRUCTION	COORDINATES	ELEVATION(msl)	TEMPLATE	DETERMINATION
1	265	200' AAO	383103.37/0873319.04	1952 (4D)	P-6	IAPA & MAP STUDY
UNPLAN	310	TOWER (33-1034)	413705.00/0742537.00	1705 (4D)	P-9	IAPA & MAP STUDY

8. FLIGHT INSPECTION:	LOW ALTITUDE	HIGH ALTITUDE
OFFICE	AVN-200	
VALIDATION DATES	11/12/2002	

9. REVISION RECORD	
REVISION NO. ORIG	DATE OF REVISION: 1/20/2003
SUPERSEDES:	DATED:

10. REASON FOR REVISION:

11. INITIATED BY:	DATE: 3/30/2002	ORGANIZATION: CHI FPO	NAME: REG ION		
12. DEVELOPED BY:	DATE: 8/18/2002	OFFICE: AVN-110	NAME: MARVIN E. WHITE		
13. AVN APPROVAL	DATE: 1/20/2003	BRANCH: AVN-110	NAME: JOHN BICKERSTAFF	SIGNATURE:	
14. DISTRIBUTION	NFDC: ATA-110	FPO: CHI	ARTCC: ZID	APP CON / ATCT: HUF TOWER	FICO: AVN-250	OTHER:

PAGE 2 OF 2

Figure 4A-10

APPENDIX 5. ILS AND RNAV STANDARD INSTRUMENT APPROACH PROCEDURE, FAA FORM 8260-3

U.S. Department of Transportation
Federal Aviation Administration

ILS - STANDARD

INSTRUMENT APPROACH PROCEDURE
TITLE 14 CFR PART 97.29

Bearings, headings, courses, and radials are magnetic. Elevations and altitudes are in feet, MSL, except HAT, HAA, TCH, and RA. Altitudes are minimum altitudes unless otherwise indicated. Ceilings are in feet above airport elevation. Distances are in nautical miles unless otherwise indicated, except visibilities which are in statute miles or in feet RVR.

TERMINAL ROUTES

FROM	TO	COURSE AND DISTANCE	ALTITUDE
APE VORTAC	COBBS LOM/I-DDV 7.24 DME	224.31/31.56	3000

MISSED APPROACH

ILS: AT THE DH. LOC: 5.03 MILES AFTER COBBS OR AT I-DVV 2.22 DME FIX

CLIMB TO 3000 THEN TURN RIGHT DIRECT XUB VOR AND HOLD, OR WHEN DIRECTED BY ATC, CLIMB TO 3000 THEN TURN RIGHT DIRECT DD LOM AND HOLS SW, RT, 051 INBOUND

ADDITIONAL FLIGHT DATA:
HOLD NE, LT, 204.00 INBOUND

FAS OBST: 819 TREES 394630N / 825826W

1. PT L SIDE OF COURSE 230.30 OUTBOUND 3000 FT WITHIN 10 MILES OF COBBS (IAF)
2.
3. FAC: 050.30 FAF: COBBS DIST FAF TO MAP: 5.03 THLD: 5.03
4. MIN. ALT: COBBS 2500
5. DIST TO THLD FROM OM: 5.03 MM: 0.50 IM: 920 150 HAT: 100 HAT: 939 GS ANT: 1015
6. MIN GS INCPT: 2500 GS ALT AT: OM: 2413 MM: 947 IM: 837
7. GS ANGLE: 3.00 TCH: 540
8. MSA FROM: DD LOM 3100

MAG VAR: 5W EPOCH YEAR: 85

MINIMUMS

TAKEOFF: X STANDARD SEE FAA FORM 8260-15A FOR THIS AIRPORT ALTERNATE: N A ILS: STANDARD LOC: STANDARD

CATEGORY =====>	A			B			C			D			E		
	DH/ MDA	VIS	HAT/HAA	DH/ MDA	VIS	HAT/HAA	DH/ MDA	VIS	HAT/HAA	DH/ MDA	VIS	HAT/HAA	DH/ MDA	VIS	HAT/HAA
S-ILS 5R	936	1800	200	936	1800	200	936	1800	200	936	1800	200			
S-LOC 5R	1080	2400	344	1080	2400	344	1080	2400	344	1080	4000	344			
SIDESTEP 5L	1080	1	336	1080	1	336	1080	1 1/2	336	1080	2	336			
CIRCLING	1180	1	436	1200	1	456	1200	1 1/2	456	1300	2	556			

NOTES:
CIRCLING NA NW OF RWYS 5L-23R.
CHART NOTE: ADF OR DME REQUIRED FOR LOC MINIMUMS.
CATEGORY II ILS SPECIAL AIRCREW AND AIRCRAFT CERTIFICATION REQUIRED.
S-ILS 5R: DA 839 MSL, 105 RA, RVR 1200, HAT 103; CAT A, B, C, D.

CITY AND STATE	ELEVATION: 744 TDZE: 05R 736 / AIRPORT NAME: 05L 744	FACILITY IDENTIFIER:	PROCEDURE NO. / AMDT NO. / EFFECTIVE DATE:	SUP:
COLUMBUS, OH	RICKENBACKER INTL	I-DDV	ILS OR LOC RWY 5R, AMDT 2 ILS RWY 5R (CATII), AMDT 2	AMDT: 1A DATE 01/15/2003

FAA FORM 8260 - 3 / December 2002 (computer generated) PAGE OF PAGES

Figure A5-1

ALL AFFECTED PROCEDURES REVIEWED?	COORDINATES OF FACILITIES	REQUIRED EFFECTIVE DATE
[X] YES [ ] NO		ROUTINE

COORDINATED WITH:

ATA	AAT	ALPA	APA	AOPA	NBAA	OTHER (specify)
X		X	X	X	X	X ZID ARTCC,CMH ATCT, LCK ATCT, AMGR

FLIGHT CHECKED BY		
NAME:	FIFO	DATE:
DEVELOPED BY		
NAME: SPECIALIST	FIFO AVN-XXX	DATE:
APPROVED BY		
NAME: MANAGER	FIFO AVN-XXX	DATE:

CHANGES:

1. CHANGED COURSE FROM APE VORTAC FROM 225.30 TO 224.31
2. CHANGED FAC FROM 050.29 TO 050.30
3. CHANGED CAT II INFO:
   DELETED 907 MSL / 170 HAT / 175 RA.
   857 MSL TO 839 MSL, 123 RA TO 105 RA, HAT 120 TO 103.
   DIST TO THLD FOR 153 HAT TO 1893 AND 103 HAT TO 939.
4. DELETED MSA SECTOR 090-270 2700
5. DELETED CAUTION AND #DME REQUIRED NOTES.
6. CHANGED TDZE FOR RWY 05R FROM 737 TO 736.
7. CHANGED GS ALT AT MM FROM 948 TO 947.
8. CHANGED NOTE "ADF OR RADAR REQUIRED" TO "ADF OR DME REQUIRED"

REASONS:

1. RE-EVALUATED COURSE.
2. 050.30 LOCALIZER CENTERLINE.
3. NEW CRITERIA PER TIL 00-005A AND PRIOR OBSTRUCTIONS (20' ANTENNA, AND GROUND ELEVATION REMOVED).
4. NEW OBSTRUCTION IN 090-270 SECTOR, NO LONGER ACHIEVE 300' DIFFERENCE.
5. NO LONGER REQUIRED.
6. NEW SURVEY DATA.
7. NEW DATA IN ASIS DATABASE.
8. IAW CURRENT CRITERIA.

Figure A5-2

U.S. Department of Transportation
Federal Aviation Administration

RNAV - STANDARD
INSTRUMENT APPROACH PROCEDURE
TITLE 14 CFR PART 97.33

Bearings, headings, courses, and radials are magnetic. Elevations and altitudes are in feet, MSL, except HAT, HAA, TCH, and RA. Altitudes are minimum altitudes unless otherwise indicated. Ceilings are in feet above airport elevation. Distances are in nautical miles unless otherwise indicated, except visibilities which are in statute miles or in feet RVR.

TERMINAL ROUTES

FROM	TO	COURSE AND DISTANCE	ALTITUDE
ZANTI (IAF) (40E) (43A)	HABRA (TF) (FB) (40E) (41E) (43B)	184.46 / 5.00	4000
HABRA (IF) (40E) (43B)	GIPNE / 2.52 NM TO COBOP (TF) (FB) (40E) (42S)	184.46 / 3.24	3000
GIPNE (40E) (42S)	COBOP (TF) (FB) (40E) (43F)	184.46 / 2.52	2200
RW18L (MAP) (43M)	346 MSL (CA) (42M)	184.46	
346 MSL	FLOZY (DF) (FO) (40E) (41E) (43H)		2000

MISSED APPROACH

LPV: DA
LNAV/VNAV: DA
LNAV: RW18L

CLIMB TO 2000 DIRECT FLOZY AND HOLD.

ADDITIONAL FLIGHT DATA:
HOLD S, LT, 004.46 INBOUND
FAS OBST: 218 POLE 282700N / 0811903W
230 TOWER 283007N / 0800950W
CHART VDP AT 1.30 MILES TO RW18L*
DISTANCE TO THLD FROM 384 HAT: 1.05 NM
ROUTE TYPE: A, R
APCH ROUTE QUALIFIER 1: W
APCH ROUTE QUALIFIER 2: S
WAAS CHANNEL # 21346
REFERENCE PATH ID: W18A

MAG VAR: 5W EPOCH YEAR: 00

1. PT NA SIDE OF COURSE ____ OUTBOUND ____ FT WITHIN ____ MILES OF ____ (IAF)
2. PROFILE STARTS AT ZANTI
3. FAC: 184.46 FAF: COBOP DIST FAF TO MAP: - THLD: 6.34
4. MIN. ALT: ZANTI 4000, HABRA 4000, GIPNE 3000, COBOP 2200
5. DIST TO THLD FROM OM: ____ MM: ____ IM: ____ 150 HAT: ____ 100 HAT: ____ GS ANT: ____
6. MIN GS INCPT: 2200 GS ALT AT: ____ OM: ____ MM: ____ IM: ____
7. GS ANGLE: 3.00 TCH: 52.0 34:1 IS NOT CLEAR
8. MSA FROM: RW18L 3000

MINIMUMS

TAKEOFF: X STANDARD ____ SEE FAA FORM 8260-15A FOR THIS AIRPORT ALTERNATE: N A ____ STANDARD

CATEGORY =====>	A			B			C			D			E		
	DH/ MDA	VIS	HAT/HAA	DH/ MDA	VIS	HAT/HAA	DH/ MDA	VIS	HAT/HAA	DH/ MDA	VIS	HAT/HAA	DH/ MDA	VIS	HAT/HAA
LPV DA	346	1	250	346	1	250	346	1	250	346	1	250			
LNAV/VNAV DA	480	6000	384	480	6000	384	480	6000	384	480	6000	384			
LNAV MDA	560	5000	464	560	5000	464	560	6000	464	560	1 1/2	464			
CIRCLING	740	1 1/4	644	740	1 1/4	644	740	1 3/4	644	740	2	644			

NOTES:
*LNAV ONLY
BARO-VNAV NA BELOW -15°C (5°F)
GPS OR RNP-0.3 REQUIRED. DME/DME RNP-0.3 NA.
CHART PLANVIEW NOTE: RADAR REQUIRED

CITY AND STATE	ELEVATION: 96 TDZE: 96 AIRPORT NAME:	FACILITY IDENTIFIER:	PROCEDURE NO. / AMDT NO. / EFFECTIVE DATE:	SUP:
ORLANDO, FL	ORLANDO INTL	RNAV	RNAV (GPS) RWY 18L, ORIG	AMDT: NONE
				DATE

FAA FORM 8260 - 3 / December 2002 (computer generated) PAGE OF PAGES

Figure A5-3

ALL AFFECTED PROCEDURES REVIEWED?	COORDINATES OF FACILITIES	REQUIRED EFFECTIVE DATE
[X] YES [ ] NO		P06/13/02

COORDINATED WITH:

ATA	AAT	ALPA	APA	AOPA	NBAA	OTHER (specify)
X		X	X	X	X	X ZJX, APP CON, CMO ATCT, AMGR

FLIGHT CHECKED BY		
NAME: PENDING	FIFO	DATE:
DEVELOPED BY		
NAME: SPECIALIST	FIFO AVN-XXX	DATE:
APPROVED BY		
NAME: MANAGER MANAGER	FIFO AVN-XXX	DATE:

CHANGES:

REASONS:
ORIGINAL - CAST PLAN

Figure A5-4

U.S. Department of Transportation
Federal Aviation Administration

RNAV - STANDARD
INSTRUMENT APPROACH PROCEDURE
TITLE 14 CFR PART 97.33

Bearings, headings, courses, and radials are magnetic. Elevations and altitudes are in feet, MSL, except HAT, HAA, TCH, and RA. Altitudes are minimum altitudes unless otherwise indicated. Ceilings are in feet above airport elevation. Distances are in nautical miles unless otherwise indicated, except visibilities which are in statute miles or in feet RVR.

TERMINAL ROUTES

FROM	TO	COURSE AND DISTANCE	ALTITUDE
CRG VORTAC (IAF) (40V) (43A)	POTME (TF) (FB) (40E) (41E) (43B)	327.57 / 2.19	3000
POTME (IF) (40E) (43B)	FIVOX (TF) (FB) (40E) (43F)	313.61 / 5.07	1700
RW31 (MAP) (40G) (41Y) (43M)	275 MSL (CA) (42M)	313.58	
275 MSL	OSBAJ (DF) (FO) (40E) 41E) (43H)		2000

MISSED APPROACH

LPV: DA
LNAV/VNAV: DA
LNAV: RW31

CLIMB TO 2000 DIRECT OSBAJ AND HOLD.

1. PT NA SIDE OF COURSE ____ OUTBOUND ____ FT WITHIN ____ MILES OF ____ (IAF)
2. PROFILE STARTS AT POTME
3. FAC: 313.58 FAF: FIVOX DIST FAF TO MAP: - THLD: 5.03
4. MIN. ALT: POTME 3000, FIVOX 1700
5. DIST TO THLD FROM OM: ____ MM: ____ IM: ____ 150 HAT: ____ 100 HAT: ____ GS ANT: ____
6. MIN GS INCPT: 1700 GS ALT AT: ____ OM: ____ MM: ____ IM: ____
7. GS ANGLE: 3.00 TCH: 50.0 34:1 IS NOT CLEAR
8. MSA FROM: RW31 2700

ADDITIONAL FLIGHT DATA:
HOLD NW, RT, 133.46 INBOUND
FAS OBST: 121 TREE 302841N / 0814039W
149 TREE 302556N / 0813809W
CHART 442 STACK 302523N / 0813627W
DISTANCE TO THLD FROM 355 HAT: 0.96 NM
CHART VDP AT 1.02 MILES TO RW31*
ROUTE TYPE: A, R
APCH ROUTE QUALIFIER 1: W
APCH ROUTE QUALIFIER 2: S
WAAS CHANNEL # 21345
REFERENCE PATH ID: W31A

MAG VAR: 3W EPOCH YEAR: 85

MINIMUMS

TAKEOFF: X STANDARD | SEE FAA FORM 8260-15A FOR THIS AIRPORT | ALTERNATE: N A | STANDARD

CATEGORY =====>	A			B			C			D			E		
	DH/ MDA	VIS	HAT/HAA	DH/ MDA	VIS	HAT/HAA	DH/ MDA	VIS	HAT/HAA	DH/ MDA	VIS	HAT/HAA	DH/ MDA	VIS	HAT/HAA
LPV DA	275	1	250	275	1	250	275	1	250	275	1	250			
LNAV/VNAV DA	380	1 1/4	355	380	1 1/4	355	380	1 1/4	355	380	1 1/4	355			
LNAV MDA	400	1	375	400	1	375	400	1	375	400	1 1/4	375			
CIRCLING	520	1 1/4	490	520	1 1/4	490	520	1 1/2	490	640	2	610			

NOTES:
*LNAV ONLY
BARO-VNAV NA BELOW -15°C (5°F)
GPS OR RNP-0.3 REQUIRED. DME/DME RNP-0.3 NA.
CHART PROFILE NOTE: VGSI AND RNAV GLIDEPATH NOT COINCIDENT

CITY AND STATE	ELEVATION: 30 TDZE: 25 AIRPORT NAME:	FACILITY IDENTIFIER:	PROCEDURE NO. / AMDT NO. / EFFECTIVE DATE:	SUP:
JACKSONVILLE, FL	JACKSONVILLE INTL	RNAV	RNAV (GPS) RWY 31, ORIG	AMDT: NONE
				DATE

FAA FORM 8260 - 3 / December 2002 (computer generated) PAGE OF PAGES

Figure A5-5

ALL AFFECTED PROCEDURES REVIEWED?	COORDINATES OF FACILITIES	REQUIRED EFFECTIVE DATE
[X] YES [ ] NO		ROUTINE

COORDINATED WITH:

ATA	AAT	ALPA	APA	AOPA	NBAA	OTHER (specify)
[X]	[ ]	[X]	[X]	[X]	[X]	[X] ZJX, JAX APP CON, AMGR

FLIGHT CHECKED BY		
NAME:	FIFO	DATE:
DEVELOPED BY		
NAME: SPECIALIST	FIFO AVN-XXX	DATE:
APPROVED BY		
NAME: MANAGER MANAGER	FIFO ANV-XXX	DATE:

CHANGES:

REASONS:
ORIGINAL REQUEST BY ATL FPO.

Figure A5-6

APPENDIX 6. RADAR - STANDARD INSTRUMENT APPROACH PROCEDURE, FAA FORM 8260-4

U.S. DEPARTMENT OF TRANSPORTATION -- FEDERAL AVIATION ADMINISTRATION
RADAR -- STANDARD INSTRUMENT APPROACH PROCEDURE -- FLIGHT STANDARDS SERVICE -- TITLE 14 CFR PART 97.31

Bearings, headings, courses, and radials are magnetic. Elevations and altitudes are in feet, MSL, except HAT, HAA, TCH. and RA. Altitudes are minimum altitudes unless otherwise indicated. Ceilings are in feet above airport elevation. Distances are in nautical miles unless otherwise indicated, except visibilities which are in statute miles or in feet RVR.

Initial approach minimum altitude(s) shall correspond with those established for enroute operation in the particular area or as set forth below. Positive identification must be established with the radar controller. From initial contact with radar to final authorized landing minimums, the instructions of the radar controller are mandatory except when; (A) Visual contact is established on final approach at or before descent to the authorized landing minimums; or (B) at pilot's discretion if it appears desirable to discontinue the approach.

Except when the radar controller may direct otherwise prior to final approach, a missed approach shall be executed as provided below when; (A) communications on final approach is lost for more than 5 seconds during a precision approach, or for more than 30 seconds during a surveillance approach; (B) directed by radar controllers; (C) visual contact is not established upon descent to authorized landing minimums; or (D) if landing is not accomplished.

RADAR TERMINAL AREA MANEUVERING SECTORS AND ALTITUDES *(Sectors and distances measured from radar antenna)*

FROM	TO	DISTANCE	ALTITUDE	DISTANCE	ALTITUDE	DISTANCE	ALTITUDE	DISTANCE	ALTITUDE	DISTANCE	ALTITUDE
AS ESTABLISHED BY THE CURRENT MINNEAPOLIS ASR MINIMUM VECTORING ALTITUDE CHART											

MISSED APPROACH

MAP:
PAR RWYS 12R/30L: DA
ASR RWYS 12R/30L: THLD

RWY 12R: CLIMB TO 1500 THEN CLIMBING RIGHT TURN TO 5000 DIRECT FGT VORTAC AND HOLD. HOLD S, RT, 358 INBOUND.

RWY 30L: CLIMB TO 1600 THEN CLIMBING RIGHT TURN TO 5000 DIRECT GEP VORTAC AND HOLD. HOLD NW, LT, 117 INBOUND.

MINIMUMS

TAKEOFF: | | STANDARD | X | SEE FAA FORM 8260-15A FOR THIS AIRPORT | ALTERNATE: N A | X |

CATEGORY =====>	A			B			C			D			E		
	DH/ MDA	VIS	HAT/HAA	DH/MDA	VIS	HAT/HAA	DH/MDA	VIS	HAT/HAA	DH/MDA	VIS	HAT/HAA	DH/MDA	VIS	HAT/HAA
PAR S-12R	1041	2400	200	1041	2400	200	1041	2400	200	1041	2400	200	1041	2400	200
PAR S-30L	1023	4000	200	1023	4000	200	1023	4000	200	1023	4000	200	1023	4000	200
ASR S-12R	1380	2400	539	1380	2400	539	1380	5000	539	1380	6000	539	1380	1 1/2	539
ASR S-30L	1360	5000	537	1360	5000	537	1360	1 1/2	537	1360	1 3/4	537	1360	2	527
CIRCLING	1380	1	539	1380	1	539	1380	1 1/2	439	1460	2	619	1660	3	819

NOTES:
PAR RWY 12R: FAF 5.82 MILES FROM THRESHOLD. GLIDESLOPE INTERCEPT ALTITUDE 2800. FINAL APPROACH COURSE 119.
PAR RWY 30L: FAF 5.32 MILES FROM THRESHOLD. GLIDESLOPE INTERCEPT ALTITUDE 2700. FINAL APPROACH COURSE 299.
ASR RWY 12R: FAF 5.82 MILES FROM THRESHOLD. MINIMUM ALTITUDE 2800; FINAL APPROACH COURSE 119. RECOMMENDED ALTITUDE 5 MILES 2470, 4 MILES 2140, 3 MILES 1810, 2 MILES 1480.
ASR RWY 30L: FAF 5.32 MILES FROM THRESHOLD. MINIMUM ALTITUDE 2700. FINAL APPROACH COURSE 299. RECOMMENDED ALTITUDE 5 MILES2390, 4 MILES2080, 3 MILES1770, 2 MILES1460.

LOST COMMUNICATIONS (ALL RWYS): **AS DIRECTED BY ATC ON INITIAL CONTACT.**

ADDITIONAL FLIGHT DATA

TDZE: **841**	RWY: **12R**	TDZE: **823**	RWY: **30L**
TDZE:	RWY:	TDZE:	RWY:

FAS OBST:
PAR RWY 12R: 179 TREE 644409N/1565733W
PAR RWY 30L: 161 ROAD 644410N/1565436W
ASR RWY 12R: 187 ANTENNA 644418N/1565724W
ASR RWY 30L: 238 TOWER 644417N/1564823W
PAR RWY 12R: GS 3.00 / TCH 50.3 / RPI 776
PAR RWY 30L: GS 3.00 / TCH 55.4 / RPI 845

MAG VAR: **3E** EPOCH YEAR: **05**

CITY AND STATE	ELEVATION: 841 AIRPORT NAME:	FACILITY IDENTIFIER:	PROCEDURE NO. / AMDT NO. / EFFECTIVE DATE:	SUP
MINNEAPOLIS, MN	**MINNEAPOLIS-ST PAUL INTL (WOLD-CHAMBERLAIN)**	**MSP ASR/PAR**	**RADAR 1, ORIG**	AMDT: **NONE**
				DATED:

FAA FORM 8260 - 4 / December 2002 (computer generated)

Page of Pages

Figure A6-1

ALL AFFECTED PROCEDURES REVIEWED?	COORDINATES OF FACILITIES	REQUIRED EFFECTIVE DATE
[X] YES [ ] NO	PAR 645043.23N/1585634.15W ASR 645144.56N/1585423.42W	ROUTINE

COORDINATED WITH:

ATA	AAT	ALPA	APA	AOPA	NBAA	OTHER (specify)
[X]	[ ]	[X]	[X]	[X]	[X]	[X] MSP ATCT, AMGR

FLIGHT CHECKED BY		
NAME:	FIFO	DATE:

DEVELOPED BY		
NAME: SPECIALIST	FIFO AVN-XXX	DATE:

APPROVED BY		
NAME: MANAGER MANAGER	FIFO AVN-XXX	DATE:

CHANGES:

REASONS:
ORIGINAL

Figure A6-2

APPENDIX 7. STANDARD

INSTRUMENT APPROACH PROCEDURE,

FAA FORM 8260-5

U.S. DEPARTMENT OF TRANSPORTATION - FEDERAL AVIATION ADMINISTRATION

NDB

STANDARD INSTRUMENT APPROACH PROCEDURE

FLIGHT STANDARDS SERVICE - TITLE 14 CFR PART 97.27

Bearings, headings, courses, and radials are magnetic. Elevations and altitudes are in feet, MSL, except HAT, HAA, TCH, and RA. Altitudes are minimum altitudes unless otherwise indicated. Ceilings are in feet above airport elevation. Distances are in nautical miles unless otherwise indicated, except visibilities which are in statute miles or in feet RVR.

TERMINAL ROUTES

FROM	TO	COURSE AND DISTANCE	ALTITUDE
GEP VORTAC	PPI NDB	125.57 / 24.58	3400
FGT VORTAC (IAF)	PPI NDB (NoPT)	070.00/3.85 (HDG) & 023.22/14.92 (PPI NDB)	2800

MISSED APPROACH

MAP: **8.20 MILES AFTER PPI NDB.**

CLIMB TO 2200 THEN CLIMBING RIGHT TURN TO 2800 DIRECT PPI NDB AND HOLD.

ADDITIONAL FLIGHT DATA:

HOLD SE, RT, 023.24 INBOUND.

FAS OBST: 1165 TREE 445721N / 925454W

HUDSN TO RW04: 3.24 / 40.

1. PT **L** SIDE OF COURSE **203.24** OUTBOUND **2800** FT WITHIN **10** MILES OF **PPI NDB** (IAF)
2.
3. FAC **023.24** FAF **PPI NDB** DIST FAF TO MAP **8.20** THLD **8.20**
4. MIN. ALT **PPI NDB 2800, HUDSN INT 1800**
8. MSA FROM: **PPI NDB 3500**

MAG VAR: **3E** EPOCH YEAR: **85**

MINIMUMS

TAKEOFF: | | STANDARD | X | SEE FAA FORM 8260-15A FOR THIS AIRPORT | ALTERNATE: N A | X |

CATEGORY =====>	A			B			C			D			E		
	MDA	VIS	HAT/HAA	MDA	VIS	HAT/ HAA	MDA	VIS	HAT/ HAA	MDA	VIS	HAT/ HAA	MDA	VIS	HAT/ HAA
S-04	1800	1	868	1800	1 1/4	868	1800	2 1/2	868		NA				
CIRCLING	1800	1	868	1800	1 1/4	868	1800	2 1/2	868		NA				
HUDSN FIX MINIMUMS															
S-04	1520	1	588	1520	1	588	1520	1 1/2	588		NA				
CIRCLING	1520	1	588	1540	1	608	1540	1 3/4	608		NA				

NOTES:
USE ST PAUL DOWNTOWN HOLMAN FIELD ALTIMETER SETTING.
STRAIGHT-IN MINIMUMS NA AT NIGHT.

CITY AND STATE	ELEVATION: 932 TDZE: 932 AIRPORT NAME:	FACILITY IDENTIFIER:	PROCEDURE NO. / AMDT NO. / EFFECTIVE DATE:	SUP
ST PAUL	LAKE ELMO	PPI	NDB RWY 4, AMDT 4	AMDT 3C
				DATE 09/30/1999

FAA FORM 8260 - 5 / December 2002 (computer generated) PAGE OF

Figure A7-1

ALL AFFECTED PROCEDURES REVIEWED?	COORDINATES OF FACILITIES	REQUIRED EFFECTIVE DATE
[X] YES [ ] NO		ROUTINE

COORDINATED WITH:

ATA	AAT	ALPA	APA	AOPA	NBAA	OTHER (specify)
[ ]	[ ]	[ ]	[ ]	[X]	[X]	[X] ZMP, MSP ATCT, AMGR

FLIGHT CHECKED BY		
NAME:	FIFO	DATE:
DEVELOPED BY		
NAME: SPECIALIST	FIFO AVN-XXX	DATE:
APPROVED BY		
NAME: MANAGER MANAGER	FIFO AVN-XXX	DATE:

CHANGES:

1. RAISED STRAIGHT-IN AND CIRCLING MDA AND STEP DOWN FIX ALTITUDE FROM 1760 TO 1800.
2. RAISED FAF, PT AND MISSED APPROACH ALTITUDE FROM 2500 TO 2800.
3. CHANGED INITIAL SEGMENT FROM FGT VORTAC.
4. ADDED NOTE"STRAIGHT-IN MINIMUMS NA AT NIGHT".
5. CHANGED MSA FROM 3400/2800 TO 3500.
6. RAISED CIRCLING CAT B/C STEP DOWN MDA FROM 1520 TO 1540.
7. "OR GPS" REMOVED FROM PROCEDURE TITLE.

REASONS:

1, 6. RE-EVALUATED REMOTE ALTIMETER ADJUSTMENT.
2, 5. NEW OBSTACLE EVALUATION.
3. IAW CURRENT CRITERIA.
4. NO LIGHTING RWY 04/22.
7. STAND ALONE RNAV (GPS) PUBLISHED RWY 32.

THIS CANCELS FDC 1/0823.

Figure A7-2

U.S. DEPARTMENT OF TRANSPORTATION - FEDERAL AVIATION ADMINISTRATION

VOR/DME

STANDARD INSTRUMENT APPROACH PROCEDURE

FLIGHT STANDARDS SERVICE - TITLE 14 CFR PART 97.23

Bearings, headings, courses, and radials are magnetic. Elevations and altitudes are in feet, MSL, except HAT, HAA, TCH, and RA. Altitudes are minimum altitudes unless otherwise indicated. Ceilings are in feet above airport elevation. Distances are in nautical miles unless otherwise indicated, except visibilities which are in statute miles or in feet RVR.

TERMINAL ROUTES

FROM	TO	COURSE AND DISTANCE	ALTITUDE
TMIAF / 10.00 DME CW (IAF)	TMMIF / 10.00 DME	10.00 DME ARC	4100
TMMIF	TMFAF / 4.00 DME	291.12 / 6.00	2700

MISSED APPROACH

MAP: **TMMAP / 0.38 DME**

CLIMB TO 2300 THEN CLIMBING LEFT TURN TO 4100 DIRECT ELO VOR/DME AND HOLD.

ADDITIONAL FLIGHT DATA:

HOLD E, LT, 291 INBOUND.
FAS OBST: 1619 TREE 474811N / 914832W
FAC CROSSES RWY C/L EXTENDED 3000 FROM THLD
TMFAF TO RW30: 3.10 / 52
CHART VDP AT 1.54 DME
CHART ELO R-194 AT TMIAF

1. PT **NA** SIDE OF COURSE ____ OUTBOUND ____ FT WITHIN ____ MILES OF ____ (IAF)
2. **PROFILE STARTS AT TMMIF**
3. FAC **291.12** FAF **TMFAF** DIST FAF TO MAP **-** THLD **3.62**
4. MIN. ALT **TMMIF 4100, TMFAF 2700**
8. MSA FROM: **ELO VOR/DME 3400**

MAG VAR: **0E** EPOCH YEAR: **00**

MINIMUMS

TAKEOFF: | | STANDARD | X | SEE FAA FORM 8260-15A FOR THIS AIRPORT | ALTERNATE: N A | | **STANDARD**

CATEGORY =====>	A			B			C			D			E		
	MDA	VIS	HAT/HAA	MDA	VIS	HAT/ HAA	MDA	VIS	HAT/ HAA	MDA	VIS	HAT/ HAA	MDA	VIS	HAT/ HAA
S-30	1880	1	425	1880	1	425	1880	1 1/4	425	1880	1 1/4	425			
CIRCLING	1920	1	465	1920	1	465	1940	1 1/2	485	2020	2	565			

NOTES:

CITY AND STATE	ELEVATION: 1455 TDZE: 1455 AIRPORT NAME:	FACILITY IDENTIFIER:	PROCEDURE NO. / AMDT NO. / EFFECTIVE DATE:	SUP
ELY, MN	ELY MUNI	ELO	VOR/DME RWY 30, AMDT 5	AMDT 4
				DATE 03/27/97

FAA FORM 8260 - 5 / December 2002 (computer generated) PAGE OF

Figure A7-3

ALL AFFECTED PROCEDURES REVIEWED?	COORDINATES OF FACILITIES	REQUIRED EFFECTIVE DATE
[X] YES [ ] NO		ROUTINE

COORDINATED WITH:

ATA	AAT	ALPA	APA	AOPA	NBAA	OTHER (specify)
[ ]	[ ]	[X]	[ ]	[X]	[X]	[X] ZMP, AMGR

FLIGHT CHECKED BY		
NAME:	FIFO	DATE:
DEVELOPED BY		
NAME: SPECIALIST	FIFO AVN-XXX	DATE:
APPROVED BY		
NAME: MANAGER MANAGER	FIFO AVN-XXX	DATE:

CHANGES:

1. MOVED FAF FROM 3 DME TO 4 DME AND RAISED ALTITUDE FROM 2400 TO 2700.
2. DELETED PROCEDURE TURN, AND FEEDER ROUTE FROM HIB VOR/DME.
3. RAISED ALTITUDE ON 10 DME ARC FROM 3300 TO 4100.
4. CHANGED MISSED APPROACH INSTRUCTIONS.
5. ADDED VGSI AND VDP DATA.
6. CHANGED FINAL RADIAL FROM 288 TO 291.

REASONS:

1. TO MEET DESCENT AND AIRSPACE REQUIREMENTS IAW 8260.3B.
2. NOT AUTHORIZED DUE TO P-204.
3. TO STAY ABOVE P-204.
4. TO SHORTEN MISSED APPROACH AND ALIGN ALTITUDE WITH THE INITIAL.
5. IAW 8260.3B, CHANGE 17.
6. 291 IS OPTIMUM FINAL COURSE.

THIS CANCELS FDC 9/4464.

Figure A7-4

APPENDIX 8.

SPECIAL INSTRUMENT APPROACH PROCEDURE,

FAA FORM 8260-7

COPTER RNAV

U.S. DEPARTMENT OF TRANSPORTATION
FEDERAL AVIATION ADMINISTRATION -- FLIGHT STANDARDS SERVICE
SPECIAL INSTRUMENT APPROACH PROCEDURE -- FLIGHT STANDARDS SERVICE

Bearings, headings, courses, and radials are magnetic. Elevations and altitudes are in feet, MSL, except HAT, HAA, TCH, and RA. Altitudes are minimum altitudes unless otherwise indicated. Ceilings are in feet above airport elevation. Distances are in nautical miles unless otherwise indicated, except visibilities which are in statute miles or in feet RVR.

If an instrument approach procedure of the above type is conducted at the below named airport, it shall be conducted in accordance with a charted instrument approach procedure predicated on the specifications contained herein, unless an approach is conducted in accordance with a different procedure for such airport authorized by the Administrator. Minimum altitudes shall correspond with those established for en route operation in the particular area or as set forth below.

TERMINAL ROUTES

FROM	TO	COURSE AND DISTANCE	ALTITUDE
CELGU WP	CUVAV WP (TF) (FB)	330.66 / 8.50	6500
BISDE WP (IAF)	HERUR WP (TF) (FB)	222.02 / 3.00	6300
CUVAV WP (IAF)	HERUR WP (TF) (FB)	041.98 / 3.00	6300
HERUR WP	JISAK WP (TF) (FB)	312.03 / 3.20	4800
RUNGE WP (MAP)	ZAGEP WP (DF) (FO)		6300

MISSED APPROACH

MAP: RUNGE WP

CLIMBING RIGHT TURN TO 6300 DIRECT ZAGEP WP AND HOLD

1. PT NA SIDE OF COURSE ____ OUTBOUND ____ FT WITHIN ____ MILES OF ____ (IAF)
2. PROFILE STARTS AT HERUR WP
3. FAC: 312.03 FAF: JISAK WPNC DIST FAF TO MAP: - THLD: ____
4. MIN. ALT: HERUR WP 6300 ; JISAK WP 4800 ; 1.2 NMTO RUNGE WP 3600
5. DIST TO THLD FROM OM: ____ MM: ____ IM: ____ 150 HAT: ____ 100 HAT: ____ GS ANT: ____
6. MIN GS INCPT: ____ GS ALT AT: ____ OM: ____ MM: ____ IM: ____
7. GS ANGLE: ____ TCH: ____
8. MSA FROM: RUNGE WP 7600

ADDITIONAL FLIGHT DATA:
HOLD S, RT , 001.94 INBOUND
MAP TO HELIPORT 312 / 0.76
FAS OBST : 2375 TREE, 351045 / 0832060
RUNGE WP TO HELIPORT 7.4 / 20 HOVER
FINAL SEGMENT (TF)

MAG VAR: 5W EPOCH YEAR: 00

MINIMUMS

TAKEOFF: | | STANDARD | | NOTES | ALTERNATE: N A | X |

CATEGORY =====>	COPTER			B			C			D			E		
	DH/ MDA	VIS	HAL	DH/ MDA	VIS	HAT/ HAA	DH/ MDA	VIS	HAT/ HAA	DH/ MDA	VIS	HAT/ HAA	DH/ MDA	VIS	HAT/ HAA
H - 312	2700	7 / 8	614												

NOTES:
SPECIFICATION ONLY, NOT FOR COCKPIT USE
LIMIT FINAL, MISSED APPROACH AND HOLDING AIRSPEED TO 70 KIAS
USE ANDREWS - MURPHY AIRPORT ALTIMETER SETTING
PROCEED VISUALLY FROM RUNGE WP OR CONDUCT THE SPECIFIED MISSED APPROACH

CITY AND STATE	ELEVATION: TDZE: Landing Area2086 / AIRPORT NAME:	FACILITY IDENTIFIER:	PROCEDURE NO. / AMDT NO. / EFFECTIVE DATE:	SUP:
FRANKLIN , NC	ANGEL MEDICAL CENTER	RNAV	COPTER RNAV (GPS) 312, ORIG	AMDT: NONE / DATED:

FAA FORM 8260 - 7 / March 20, 1998 (computer generated)

PAGE 1 OF 1 PAGES

NOTES CONTINUED:

AIR CARRIER NOTES:

The procedure on the other side and the foregoing data are hereby:

SUBMITTED BY		
NAME: DANIEL E. NORMAN, MANAGING OWNER, 865-681-6137	COMPANY STI, LLC	DATE: 03/05/02
FLIGHT CHECKED BY		
NAME:	FIO	DATE:
DEVELOPED BY		
NAME:	NFPO AVN-160	DATE:
RECOMMENDED BY		
NAME: MANAGER	NFPO AVN-110	DATE:
APPROVED BY		
NAME:	AFS-400	DATE:

OPERATIONS SPECIFICATIONS -- AIRPORT

_____ holding Air Carrier Operating Certificate No. _____ hereby acknowledges receipt of Operations Specifications to operate into and out of the airport named on the other side as a ☐ Regular, ☐ Refueling, ☐ Alternate, ☐ Provisional for _____ airport with the following type aircraft:

Unless otherwise authorized in the Operations Specifications - Airport, an instrument approach of this type shall be conducted in accordance with the procedure specified on the other side and the air carrier minimums specified above with the following exceptions:

DATE: _____ RECEIVED FOR THE AIR CARRIER BY: _____ TITLE: _____
SIGNATURE

AMENDMENT NO. _____

BY DIRECTION OF THE ADMINISTRATOR _____ _____
SIGNATURE TITLE

EFFECTIVE DATE: _____

Figure A8-2

RNAV

U.S. DEPARTMENT OF TRANSPORTATION
FEDERAL AVIATION ADMINISTRATION -- FLIGHT STANDARDS SERVICE
SPECIAL INSTRUMENT APPROACH PROCEDURE -- FLIGHT STANDARDS SERVICE

Bearings, headings, courses, and radials are magnetic. Elevations and altitudes are in feet, MSL, except HAT, HAA, TCH, and RA. Altitudes are minimum altitudes unless otherwise indicated. Ceilings are in feet above airport elevation. Distances are in nautical miles unless otherwise indicated, except visibilities which are in statute miles or in feet RVR.

If an instrument approach procedure of the above type is conducted at the below named airport, it shall be conducted in accordance with a charted instrument approach procedure predicated on the specifications contained herein, unless an approach is conducted in accordance with a different procedure for such airport authorized by the Administrator. Minimum altitudes shall correspond with those established for en route operation in the particular area or as set forth below.

TERMINAL ROUTES

FROM	TO	COURSE AND DISTANCE	ALTITUDE
DIKLE WP (IAF)	HOBSA WP (TF) (FB)	319.29/5.22	2600
HOBSA WP (IF)	JUBMI WP (TF) (FB)	001.88 / 5.00	2600
RW36 (MAP)	HIVOX WP (TF) (FB)	001.88 / 4.19	2600

MISSED APPROACH

MAP: GLS: NA LNAV / VNAV : DA

LNAV: RW36

CLIMB TO 2600 VIA 001.88 COURSE TO HIVOX WP AND HOLD

1. PT NA SIDE OF COURSE ____ OUTBOUND ____ FT WITHIN ____ MILES OF ____ (IAF)
2. PROFILE STARTS AT HOBSA WP
3. FAC: 001.88 FAF: JUBMI WP DIST FAF TO MAP: - THLD: 4.88
4. MIN. ALT: HOBSA WP 2600 ; JUBMI WP 2600
5. DIST TO THLD FROM OM: ____ MM: ____ IM: ____ 150 HAT: ____ 100 HAT: ____ GS ANT: ____
6. MIN GS INCPT: 2600 GS ALT AT: ____ OM: - MM: - IM: -
7. GS ANGLE: 3.0 TCH: 50.0 34:1 IS CLEAR
8. MSA FROM: RW36 2600

ADDITIONAL FLIGHT DATA:
HOLD S, RT, 001.88 INBOUND
FAS OBST: 1080 TREES 391933 / 0851612
CHART VDP AT 1.05 NM TO RW36*
DISTANCE TO THLD FROM 366 HAT : 0.99 NM
FINAL SEGMENT (TF)
CHART PLAN VIEW NOTE: RADAR REQUIRED

MAG VAR: 4W EPOCH YEAR: 00

MINIMUMS

TAKEOFF: | | STANDARD | X | NOTES | ALTERNATE: N A | X |

CATEGORY =====>	A			B			C			D			E		
	DH/ MDA	VIS	HAT/HAA	DH/ MDA	VIS	HAT/ HAA	DH/ MDA	VIS	HAT/ HAA	DH/ MDA	VIS	HAT/ HAA	DH/ MDA	VIS	HAT/ HAA
GLS PA DA		NA			NA			NA			NA			NA	
LNAV / VNAV	1340	1 1/4	365	1340	1 1/4	365	1340	1 1/4	365	1340	1 1/4	365			
LNAV MDA	1360	1	385	1360	1	385	1360	1	385	1360	1 1/4	385			

NOTES: SPECIFICATION ONLY - NOT FOR COCKPIT USE
TAKEOFF MINIMUMS: RWY 18 STANDARD, RWY 36 300-1 (1099 TREES 392111/851536)
BARO VNAV NA BELOW -15C (5F)
GPS OR RNP 0.3 REQUIRED , DME / DME RNP 0.3 NA
* LNAV ONLY

CITY AND STATE	ELEVATION: 975 TDZE: 975 AIRPORT NAME:	FACILITY IDENTIFIER:	PROCEDURE NO. / AMDT NO. / EFFECTIVE DATE:	SUP:
BATESVILLE, IN	HILLENBRAND AIRPORT	RNAV	RNAV (GPS) RWY 36, ORIG	AMDT: NONE
				DATED:

FAA FORM 8260 - 7 / March 20, 1998 (computer generated)

PAGE 1 OF 1 PAGES

Figure A8-3

NOTES CONTINUED:

AIR CARRIER NOTES:

The procedure on the other side and the foregoing data are hereby:

SUBMITTED BY		
NAME: DANIEL E. NORMAN, MANAGING OWNER, 865-681-6137	COMPANY STI, LLC	DATE: 02/27/02
FLIGHT CHECKED BY		
NAME:	FIO	DATE:
DEVELOPED BY		
NAME: RICHARD K. CLARK	NFPO AVN-160	DATE:
RECOMMENDED BY		
NAME: DAVID R. COOK MANAGER	NFPO AVN-130	DATE:
APPROVED BY		
NAME:	AFS-400	DATE:

OPERATIONS SPECIFICATIONS -- AIRPORT

_____ holding Air Carrier Operating Certificate No. _____ hereby acknowledges receipt of Operations Specifications to operate into and out of the airport named on the other side as a ☐ Regular, ☐ Refueling, ☐ Alternate, ☐ Provisional for _____ airport with the following type aircraft:

Unless otherwise authorized in the Operations Specifications - Airport, an instrument approach of this type shall be conducted in accordance with the procedure specified on the other side and the air carrier minimums specified above with the following exceptions:

DATE: _____ RECEIVED FOR THE AIR CARRIER BY: _____ TITLE: _____
SIGNATURE

AMENDMENT NO. _____

BY DIRECTION OF THE ADMINISTRATOR _____ _____
SIGNATURE TITLE

EFFECTIVE DATE: _____

Figure A8-4

APPENDIX 9.

STANDARD INSTRUMENT APPROACH

PROCEDURE DATA RECORD,

FAA FORM 8260-9

STANDARD INSTRUMENT APPROACH PROCEDURE DATA RECORD

PART - A OBSTRUCTION DATA

1. APP SEGMENT	FROM	TO	OBSTRUCTION	COORDINATES	ELEV. MSL	ROC	ALT. ADJUSTMENTS	MIN. ALT.
INITIAL	ZANTI	HABRA	1. TOWER (10-0366)	284250.00N / 0812034.00W	577 (3C)	1000	AT	4000
			2. TERRAIN	284015.00N / 0812054.00W	115 (100)		AS1500	1600
INTERMEDIATE	HABRA (IF/IAF)	GIPNE / 2.52 NM	3. TOWER (10-1952)	283635.00N / 0811927.00W	402 (5D)	500	AT	3000
		TO COBOP	4. TERRAIN	283906.00N / 0812121.00W	119 (100)		AS1500	1600
STEPDOWN	GIPNE	COBOP	5. TOWER (10-1931)	283539.00N / 0811805.00W	412 (5D)	500	AT	2200
			6. TERRAIN	283354.00N / 0812015.00W	138 (100)		AS1500	1600
FINAL: LNAV/VNAV	COBOP	RW18L	7. 100' TREE	283108.00N / 0812045.00W	226 (2C)	34:1		480 / 384
FINAL: LNAV	COBOP	RW18L	8. TOWER (10-6162)	283007.00N / 0811950.00W	230 (4D)	250	XL18, AC50	560
FINAL: LPV	GS INTCP	THLD				34:1		346 / 250
2. PROCEDURE TURN	NA							
3. MISSED APPROACH MAP:	DA/DA/RW18L	FLOZY				ASC		2000
			9. TOWER (10-1956)	283108.00N / 0811945.00W	560 (4D)	1000		1600
ELEV:	138 / 230 / 293		10. TERRAIN	283134.00N / 0811956.00W	123 (100)		AS1500	1600

4. CIRCLING	DISTANCE	HT. ABV. ARPT. REQUIRED	HT. ABV. ARPT. ACTUAL							
CATEGORY A	1.3 NM	350	644	11. 320' NEW ATCT	282538.00N / 0811828.00W	434 (2C)	300		740
CATEGORY B	1.5 NM	450	644	11.		434 (2C)	300		740
CATEGORY C	1.7 NM	450	644	11.		434 (2C)	300		740
CATEGORY D	2.3 NM	550	644	11.		434 (2C)	300		740
CATEGORY E	4.5 NM	550							

5. MINIMUM SAFE ALTITUDES — PRIMARY NAVAID: RW18L

SECTOR	OBSTRUCTION	BRG / DIST	ELEVATION (MSL)	M S A	SECTOR	OBSTRUCTION	BRG / DIST	ELEVATION (MSL)	M S A
360-360	TOWER	128 / 18.8	1949 (2C)	3000					

CITY AND STATE	AIRPORT & ELEVATION 96	FACILITY	PROCEDURE AND AMENDMENT NO:	REGION
ORLANDO, FL	ORLANDO INTL	RNAV	RNAV (GPS) RWY 18L, ORIG	ASO

FAA Form 8260 - 9 / December 2002 (Computer Generated)

Figure A9-1

NOTES / EXPLANATIONS FROM OPPOSITE SIDE OF FORM:

SEE AIRSPACE LETTER ATTACHED.

VERTICAL DATUM: NAVD88

GEOID HEIGHT: -91.5

LNAV/VNAV: INNER SURFACE: 23.4:1
OUTER SURFACE: 34:1

PART B - SUPPLEMENTAL DATA

1. COMMUNICATIONS WITH:	2. WEATHER SERVICE		3. ALTIMETER SETTING
MCO ATCT **MCO APP CON**	[ ] N W S [ ] F A A [ ] A / C	OTHER: **ASOS** **LLWAS**	SOURCE: **KMCO** DISTANCE:
SATISFACTORY ON: [X] V H F [X] U H F [ ] H F	LOCATION: **ON AIRPORT**		HOURS REMOTE OPERATION:
	HRS OPTN: **24**		ADJUSTMENT:

4. MONITOR STATUS	PRIMARY		SECONDARY	
	NAVAID:		NAVAID:	
	MONITOR POINT:		MONITOR POINT:	
	HRS OPTN:	CAT 1 CAT 3	HRS OPTN:	CAT 1 CAT 3

5. AIRSPACE				
	FLOOR OF CONTROLLED AIRSPACE UNDER FAC			CONTROL AREA
	X	CONTROL ZONE: **24**	HOURS OPTN	TRANSITION AREA

6. APPROACH & RUNWAY LIGHTING				
	X	ALS**F-2 17, 35, 36R**	X	REIL **36L**
		(S) SALS	X	TDZ **17, 18R, 36R**
	X	MALS**R 18R**	X	C/LINE **17-35, 18L-36R, 18R-36L**
	X	HIRL **17-35, 18L-36R, 18R-36L**	X	OTHER (Specify) **VASI 18L, 36L**
		MIRL		

7. RUNWAY MARKINGS	8. RUNWAY VISUAL RANGE
ALL WEATHER	APPROACH **17-35, 18L-36R, 18R-36L**
INSTRUMENT	ROLL OUT **17-35, 18L-36R, 18R-36L**

9. GLIDE SLOPE		
G S ANGLE: **3.00**	ELEV RWY THRESHOLD: **92.5**	
DISTANCE FROM RWY:	ELEV GS ANTENNA:	
	THRESHOLD CROSSING HEIGHT: **52.0**	

10. FINAL APPROACH COURSE AIMING			
	X	RUNWAY THRESHOLD	F T. FROM THRESHOLD
	X	ON CENTERLINE	F T. FROM CENTERLINE

11. WAIVERS OF STANDARDS	NUMBER OF WAIVERS ON FILE	DATES OF APPROVAL
	NONE	

PART C - REMARKS:
TAA NOT USED, ATC REQUEST.

ALTITUDES AT ALL FIXES ARE ATC REQUIREMENTS.

ASOS IS ON SERVICE-A

VGSI DATA: 3.00/53

PART D - PREPARED BY:	DATE:
SPECIALIST	**08/26/2002**
TITLE: **AERONAUTICAL INFORMATION SPECIALIST**	OFFICE: **AVN-XXX**

Figure A9-2

STANDARD INSTRUMENT APPROACH PROCEDURE DATA RECORD

PART - A OBSTRUCTION DATA

1. APP SEGMENT	FROM	TO	OBSTRUCTION	COORDINATES	ELEV. MSL	ROC	ALT. ADJUSTMENTS	MIN. ALT.
INITIAL	CRG VORTAC	POTME	1. TOWER (10-2221)	301932.00N / 0813300.00W	264 (1A)	1000	AT	3000
			2. TERRAIN	302315.00N / 0812921.00W	92 (100)		AS1500	1600
INTERMEDIATE	POTME (IF/IAF)	FIVOX	3. STACK (10-2017)	302552.00N / 0813302.00W	660 (5D)	500	DG540	1700
			4. TERRAIN	302312.00N/ 0812933.00W	92 (100)		AS1500	1600
FINAL: LNAV/VNAV	FIVOX	RW31	5. 100' TREE	302645.00N / 0813910.00W	130 (2C)	PDA		380 / 355
FINAL: LNAV	FIVOX	RW31	6. 100' TREE	302556.00N / 0813809.00W	149 (2C)	250		400
FINAL: LPV	GS INTCP	THLD				34:1		275 / 250
2. PROCEDURE TURN	NA							
3. MISSED APPROACH MAP:	DA/DA/RW31	OSBAJ				ASC		2000
			7. TOWER (10-1987)	302543.00N / 0813945.00W	252 (4D)	1000		1300
ELEV:	130 / 150 / 127		8. TERRAIN	302532.00N / 0814002.00W	98 (100)		AS1500	1600

4. CIRCLING	DISTANCE	HT. ABV. ARPT. REQUIRED	HT. ABV. ARPT. ACTUAL						
CATEGORY A	1.3 NM	350	490	9. TANK (10-3074)	302936.00N / 0814036.00W	202 (1B)	300		520
CATEGORY B	1.5 NM	450	490	9.		202 (1B)	300		520
CATEGORY C	1.7 NM	450	490	9.		202 (1B)	300		520
CATEGORY D	2.3 NM	550	610	10. TOWER (10-3375)	302925.00N / 0813805.00W	280 (5D)	300	AC50	640
CATEGORY E	4.5 NM	550							

5. MINIMUM SAFE ALTITUDES — PRIMARY NAVAID: RW31

SECTOR	OBSTRUCTION	BRG / DIST	ELEVATION (MSL)	M S A	SECTOR	OBSTRUCTION	BRG / DIST	ELEVATION (MSL)	M S A
360-360	TOWER	355 / 20.7	1641 (5D)	2700					

CITY AND STATE	AIRPORT & ELEVATION 30	FACILITY	PROCEDURE AND AMENDMENT NO:	REGION
JACKSONVILLE, FL	JACKSONVILLE INTL	RNAV	RNAV (GPS) RWY 31, ORIG	ASO

FAA Form 8260 - 9 / December 2002 (Computer Generated)

Figure A9-3

NOTES / EXPLANATIONS FROM OPPOSITE SIDE OF FORM:

SEE AIRSPACE LETTER ATTACHED.

LNAV/VNAV INNER SURFACE: 23.4:1
OUTER SURFACE: 34:1

GEOID HEIGHT: -93.2

VERTICAL DATUM: NAVD88

PARA 251, 34:1 PENETRATIONS:
KJAXA005 115 TREE 302825.85/0811423.37
KJAXA004 116 TREE 302825.27/0814023.32

PART B - SUPPLEMENTAL DATA

1. COMMUNICATIONS WITH:	2. WEATHER SERVICE		3. ALTIMETER SETTING
JAX APP CON	[ ] N W S [ ] F A A [ ] A / C	OTHER: **ASOS LLWAS**	SOURCE: **KJAX**
			DISTANCE:
SATISFACTORY ON: [X] V H F [X] U H F [ ] H F	LOCATION: **ON AIRPORT**		HOURS REMOTE OPERATION:
	HRS OPTN: **24**		ADJUSTMENT:

4. MONITOR STATUS	PRIMARY		SECONDARY	
	NAVAID:		NAVAID:	
	MONITOR POINT:		MONITOR POINT:	
	HRS OPTN:	CAT 1	HRS OPTN:	CAT 1
		CAT 3		CAT 3

5. AIRSPACE				
	FLOOR OF CONTROLLED AIRSPACE UNDER FAC			CONTROL AREA
	X	CONTROL ZONE: **24**	HOURS OPTN	TRANSITION AREA

6. APPROACH & RUNWAY LIGHTING				
	X	ALS**F-2 7**	X	REIL **31**
		(S) SALS	X	TDZ **7-25, 13**
	X	MALS**R 13, 25**		C/LINE
	X	HIRL **7-25, 13-31**	X	OTHER (Specify) **VASI 31, PAPI 7**
		MIRL		

7. RUNWAY MARKINGS	8. RUNWAY VISUAL RANGE
ALL WEATHER **PIR-G 7-25, 13-31**	APPROACH
INSTRUMENT	ROLL OUT

9. GLIDE SLOPE		
G S ANGLE: **3.00**	ELEV RWY THRESHOLD: **42.2**	
DISTANCE FROM RWY:	ELEV GS ANTENNA:	
	THRESHOLD CROSSING HEIGHT: **50.0**	

10. FINAL APPROACH COURSE AIMING			
	X	RUNWAY THRESHOLD	F T. FROM THRESHOLD
	X	ON CENTERLINE	F T. FROM CENTERLINE

11. WAIVERS OF STANDARDS	NUMBER OF WAIVERS ON FILE	DATES OF APPROVAL
	NONE	

PART C - REMARKS:
TERPS PARA 289 APPLIED TO 442 STACK 302523 / 0813627

ASOS IS ON SERVICE-A

TAA NOT USED PER ATC REQUEST.

VGSI DATA: 3.00/51

PART D - PREPARED BY:	DATE:
SPECIALIST	**08/26/2002**
TITLE: **AERONAUTICAL INFORMATION SPECIALIST**	OFFICE: **AVN-XXX**

Figure A9-4

STANDARD INSTRUMENT APPROACH PROCEDURE DATA RECORD

PART - A OBSTRUCTION DATA

1. APP SEGMENT	FROM	TO	OBSTRUCTION	COORDINATES	ELEV. MSL	ROC	ALT. ADJUSTMENTS	MIN. ALT.
FEEDER	APE VORTAC	COBBS LOM /	1. TOWER (36-0448)	400921.00N / 823651.00W	1580 (1C)	1000	AT	3000
		I-DDV 7.24 DME	2. TERRAIN	400933.00N / 823642.00W	1349(1300)		AS1500	2800
INTERMEDIATE	10NM	COBBS	3. TOWER (36-2643)	393520.00N / 830644.00W	1917 (5D)	500	AT	2500
			4. TERRAIN	394045.00N / 831251.00W	883 (900)		AS1500	2400
FINAL: ILS	GS INTCP	THLD				ASC		936 / 200
FINAL: LOC	COBBS	RW05R	5. 100' TREE	394630.00N / 825826.00W	819 (2C)	250		1080
FINAL: SIDESTEP	COBBS	RW05L	5.		819 (2C)	250		1080
FINAL: ILS (CAT II)	GS INTCP	THLD				ASC		839 / 105
	COBBS	10NM	3.		1917 (5D)	1000	AT	3000
2. PROCEDURE TURN			6. TERRAIN	394106.00N / 831245.00W	886 (900)		AS1500	2400
3. MISSED APPROACH MAP:	DA / RW05R	XUB VOR				ASC		3000
			7. TOWER (36-2432)	395224.00N / 824312.00W	1687 (4D)	1000		2700
ELEV:	811 / 830		8. TERRAIN	394523.00N / 824113.00W	987 (1000)		AS1500	2500

4. CIRCLING	DISTANCE	HT. ABV. ARPT. REQUIRED	HT. ABV. ARPT. ACTUAL							
CATEGORY A	1.3 NM	350	456	9. 100' TREE	394738.00N / 825438.00W	879 (2C)	300		1180
CATEGORY B	1.5 NM	450	456	9.		879 (2C)	300		1180
CATEGORY C	1.7 NM	450	456	9.		879 (2C)	300		1180
CATEGORY D	2.3 NM	550	556	9.		879 (2C)	300	HAA	1300
CATEGORY E	4.5 NM	550							

5. MINIMUM SAFE ALTITUDES — PRIMARY NAVAID: DD LOM

SECTOR	OBSTRUCTION	BRG / DIST	ELEVATION (MSL)	M S A	SECTOR	OBSTRUCTION	BRG / DIST	ELEVATION (MSL)	M S A
360-360	TOWER	015 / 25.4	2046 (5D)	3100					

CITY AND STATE	AIRPORT & ELEVATION 744	FACILITY	PROCEDURE AND AMENDMENT NO:	REGION
COLUMBUS, OH	RICKENBACKER INTL	I-DDV	ILS OR LOC RWY 5R, AMDT 2 ILS RWY 5R (CAT II), AMDT 2	AGL

FAA Form 8260 - 9 / December 2002 (Computer Generated)

Figure A9-5

NOTES / EXPLANATIONS FROM OPPOSITE SIDE OF FORM:

NO AIRSPACE ACTION REQUIRED.

CAT II: 739' GROUND ELEVATION (KLCK0003) PENETRATES TOUCHDOWN AREA BY 3'. INCREASED 100 HAT 3' IAW TIL00-005A, DATED OCT 18, 2000, PARA 4.1.1b.

PART B - SUPPLEMENTAL DATA

1. COMMUNICATIONS WITH:	2. WEATHER SERVICE		3. ALTIMETER SETTING
CMH APP CON **LCK ATCT**	[ ] N W S [ ] F A A [ ] A / C	OTHER: **AWOS-3**	SOURCE: **KLCK**
			DISTANCE:
SATISFACTORY ON: [X] V H F [X] U H F [ ] H F	LOCATION: **ON AIRPORT**		HOURS REMOTE OPERATION:
	HRS OPTN: **24**		ADJUSTMENT:

4. MONITOR STATUS	PRIMARY		SECONDARY	
	NAVAID: **I-DDV LOCALIZER**		NAVAID: **DD LOM**	
	MONITOR POINT: **LCK ATCT**		MONITOR POINT: **LCK ATCT**	
	HRS OPTN: CAT 1	**24**	HRS OPTN: CAT 1	**24**
	CAT 3		CAT 3	

5. AIRSPACE				
	FLOOR OF CONTROLLED AIRSPACE UNDER FAC			CONTROL AREA
	CONTROL ZONE:		HOURS OPTN	X TRANSITION AREA

6. APPROACH & RUNWAY LIGHTING				
	X	ALS**F-2 05R**	X	REIL **05L/23R**
		(S) SALS	X	TDZ **05R**
	X	MALS**R 23L**	X	C/LINE **05R/23L**
	X	HIRL **05R/05L 23L/23R**	X	OTHER (Specify) **VASI 05R/23L**
		MIRL		

7. RUNWAY MARKINGS	8. RUNWAY VISUAL RANGE
ALL WEATHER **PIR-G 05R/05L 23L/23R**	APPROACH
INSTRUMENT	ROLL OUT

9. GLIDE SLOPE		
G S ANGLE: **3.00**	ELEV RWY THRESHOLD: **734.7**	
DISTANCE FROM RWY: **1015**	ELEV GS ANTENNA: **739.4**	
	THRESHOLD CROSSING HEIGHT: **53.8**	

10. FINAL APPROACH COURSE AIMING			
	X	RUNWAY THRESHOLD	F T. FROM THRESHOLD
	X	ON CENTERLINE	F T. FROM CENTERLINE

11. WAIVERS OF STANDARDS	NUMBER OF WAIVERS ON FILE	DATES OF APPROVAL
	NONE	

PART C - REMARKS:

AWOS-3 IS ON SERVICE-A.

PART D - PREPARED BY:	DATE:
SPECIALIST	**08/26/2002**
TITLE: **AERONAUTICAL INFORMATION SPECIALIST**	OFFICE: **AVN-XXX**

Figure A9-6

STANDARD INSTRUMENT APPROACH PROCEDURE DATA RECORD

PART - A OBSTRUCTION DATA

1. APP SEGMENT	FROM	TO	OBSTRUCTION	COORDINATES	ELEV. MSL	ROC	ALT. ADJUSTMENTS	MIN. ALT.
FEEDER	GEP VORTAC	PPI NDB	1. TOWERS (24-0499)	450345.10N / 930822.20W	2438 (4D)	1000		3500
			2. TERRAIN	445457.00N / 925645.00W	1139(1100)		AS1500	2600
INITIAL	FGT VORTAC	PPI NDB	3. TOWER (24-1201)	444121.00N / 930423.00W	1753 (5D)	1000		2800
			4. TERRAIN	443533.00N / 925857.00	1080(1100)		AS1500	2600
INTERMEDIATE	10NM	PPI NDB	5. STACKS (24-1245)	444517.00N / 930236.00W	1295 (5D)	500	AT	2800
			6. TERRAIN	445157.00N / 925618.00W	1047(1000)		AS1500	2500
FINAL	PPI NDB	RW04	7. 200' TOWER	445640.00N / 925552.00W	1320 (2C)	300	RA54# XL110	1800
FINAL: STEPDOWN	HUDSN INT	RW04	8. 100' TREE	445721.00N / 925454.00W	1165 (2C)	300	RA54	1520
	PPI NDB	10NM	3.		1753 (5D)	1000		2800
2. PROCEDURE TURN			2.		1139(1100)		AS1500	2600
3. MISSED APPROACH MAP:	RW04	PPI NDB				ASC		2800
			9. ANT (24-5502)	445243.00N / 925423.00W	1565 (4D)	1000		2600
ELEV:	1166		10. TERRAIN	445132.00N / 925545.00W	1056(1100)		AS1500	2600

4. CIRCLING	DISTANCE	HT. ABV. ARPT. REQUIRED	HT. ABV. ARPT. ACTUAL		OBSTRUCTION	COORDINATES	ELEV. MSL	ROC	ALT. ADJUSTMENTS	MIN. ALT.
CATEGORY A	1.3 NM	350	868 / 588	11. 100' TREE	445827.00N / 925033.00W	1139 (2C)	300	SI / SI	1800 / 1520
CATEGORY B	1.5 NM	450	868 / 608	12. 150' POWER LINE	450015.00N / 924900.00W	1179 (2C)	300	SI / RA54	1800 / 1540
CATEGORY C	1.7 NM	450	868 / 608	12.		1179 (2C)	300	SI / RA54	1800 / 1540
CATEGORY D	2.3 NM	550	NA						
CATEGORY E	4.5 NM	550							

5. MINIMUM SAFE ALTITUDES — PRIMARY NAVAID: PPI NDB

SECTOR	OBSTRUCTION	BRG / DIST	ELEVATION (MSL)	M S A	SECTOR	OBSTRUCTION	BRG / DIST	ELEVATION (MSL)	M S A
360-360	TOWERS	321 / 14.1	2438 (4D)	3500					

CITY AND STATE	AIRPORT & ELEVATION	FACILITY	PROCEDURE AND AMENDMENT NO:	REGION
ST PAUL, MN	LAKE ELMO 932	PPI NDB	NDB RWY 4, AMDT 4	AGL

FAA Form 8260 - 9 / December 2002 (Computer Generated)

Figure A9-7

NOTES / EXPLANATIONS FROM OPPOSITE SIDE OF FORM:

NO ADDITIONAL AIRSPACE REQUIRED.

EDA (PRESSURE PATTERNS SAME)
K21D 932 MSL
KSTP 705 MSL

PART B - SUPPLEMENTAL DATA

1. COMMUNICATIONS WITH:	2. WEATHER SERVICE		3. ALTIMETER SETTING
MSP APP CON **PNM FSS**	[ ] N W S [ ] F A A [ ] A / C	OTHER: **ASOS**	SOURCE: **KSTP**
			DISTANCE: **9.49**
SATISFACTORY ON: [X] V H F [X] U H F [ ] H F	LOCATION: **KSTP**		HOURS REMOTE OPERATION: **24**
	HRS OPTN: **24**		ADJUSTMENT: **53.61**

4. MONITOR STATUS	PRIMARY		SECONDARY	
	NAVAID: **PPI NDB**		NAVAID:	
	MONITOR POINT: **INTERNAL**		MONITOR POINT:	
	HRS OPTN: CAT 1 / CAT 3	**24**	HRS OPTN: CAT 1 / CAT 3	

5. AIRSPACE				
	FLOOR OF CONTROLLED AIRSPACE UNDER FAC			CONTROL AREA
	CONTROL ZONE:		HOURS OPTN	X TRANSITION AREA

6. APPROACH & RUNWAY LIGHTING				
		ALS	X	REIL **14/32 (PCL)**
		(S) SALS		TDZ
		MALS		C/LINE
		HIRL	X	OTHER (Specify) **PAPI 32 (PCL)**
	X	MIRL **14/32**		

7. RUNWAY MARKINGS **BSC-G 04/22 14/32**	8. RUNWAY VISUAL RANGE
ALL WEATHER	APPROACH
INSTRUMENT	ROLL OUT

9. GLIDE SLOPE		
	G S ANGLE:	ELEV RWY THRESHOLD:
	DISTANCE FROM RWY:	ELEV GS ANTENNA:
		THRESHOLD CROSSING HEIGHT:

10. FINAL APPROACH COURSE AIMING			
	X	RUNWAY THRESHOLD	F T. FROM THRESHOLD
	X	ON CENTERLINE	F T. FROM CENTERLINE

11. WAIVERS OF STANDARDS	NUMBER OF WAIVERS ON FILE	DATES OF APPROVAL
	NONE	

PART C - REMARKS:
ASOS IS ON SERVICE-A.
VDP NOT ESTABLISHED. NO DME SOURCE/REMOTE ALTIMETER IN USE.
NO LIGHTING RWY 04/22.

PART D - PREPARED BY:	DATE:
SPECIALIST	**08/26/2002**
TITLE:	OFFICE:
AERONAUTICAL INFORMATION SPECIALIST	**AVN-XXX**

Figure A9-8

STANDARD INSTRUMENT APPROACH PROCEDURE DATA RECORD

PART - A OBSTRUCTION DATA

1. APP SEGMENT	FROM	TO	OBSTRUCTION	COORDINATES	ELEV. MSL	ROC	ALT. ADJUSTMENTS	MIN. ALT.
INITIAL	TMIAF / 10.00 DME	TMMIF / 10.00 DME	1. 200' AAO	474142.00N / 915257.00W	2034 (4D)	1000	AT	4100
	CCW		2. TERRAIN	474142.00N / 915257.00W	1834(1800)		AS1500	3300
INTERMEDIATE	TMMIF	TMFAF / 4.00 DME	3. 200' AAO	474657.00N / 913648.00W	1949 (4D)	500		2400
			4. TERRAIN	474657.00N / 913648.00W	1749(1700)		AS1000	2700
FINAL	TMFAF	RW30	5. TREE (BTL-1061)	474811.00N / 914832.00W	1619 (2C)	250		1880
2. PROCEDURE TURN	NA							
3. MISSED APPROACH MAP:	RW30	ELO VOR/DME				ASC		4100
			6. TOWER (24-6623)	474856.00N / 913542.00W	1651 (4D)	1000		2700
ELEV:	1650		7. TERRAIN	474952.00N / 913443.00W	1723(1700)		AS1500	3200

4. CIRCLING	DISTANCE	REQUIRED HT. ABV. ARPT.	ACTUAL HT. ABV. ARPT.						
CATEGORY A	1.3 NM	350	465	5.		1619 (2C)	300		1920
CATEGORY B	1.5 NM	450	465	5.		1619 (2C)	300		1920
CATEGORY C	1.7 NM	450	485	8. TREES (BTL-1062)	474741.00N / 914936.00W	1629 (2C)	300		1940
CATEGORY D	2.3 NM	550	565	9. TREES (BTL-1100)	474703.00N / 914832.00W	1639 (2C)	300	HAA	2020
CATEGORY E	4.5 NM	550							

5. MINIMUM SAFE ALTITUDES — PRIMARY NAVAID: ELO VOR/DME

SECTOR	OBSTRUCTION	BRG / DIST	ELEVATION (MSL)	M S A	SECTOR	OBSTRUCTION	BRG / DIST	ELEVATION (MSL)	M S A
360-360	TOWER	129 / 25.4	2316 (5E)	3400					

CITY AND STATE	AIRPORT & ELEVATION	FACILITY	PROCEDURE AND AMENDMENT NO:	REGION
ELY, MN	ELY MUNI 1455	ELO VOR/DME	VOR/DME RWY 30, AMDT 5	AGL

FAA Form 8260 - 9 / December 2002 (Computer Generated)

Figure A9-9

NOTES / EXPLANATIONS FROM OPPOSITE SIDE OF FORM:

NO AIRSPACE ACTION REQUIRED.

PART B - SUPPLEMENTAL DATA

1. COMMUNICATIONS WITH:	2. WEATHER SERVICE		3. ALTIMETER SETTING
ZMP **PNM FSS**	[ ] N W S [ ] F A A [ ] A / C	OTHER: **AWOS-3**	SOURCE: **KELO** DISTANCE:
SATISFACTORY ON: [X] V H F [X] U H F [ ] H F	LOCATION: **ON AIRPORT** HRS OPTN: **24**		HOURS REMOTE OPERATION: ADJUSTMENT:

4. MONITOR STATUS	PRIMARY		SECONDARY	
	NAVAID: **ELO VOR/DME**		NAVAID:	
	MONITOR POINT: **PNM FSS**		MONITOR POINT:	
	HRS OPTN: CAT 1	**24**	HRS OPTN: CAT 1	
	CAT 3		CAT 3	

5. AIRSPACE				
FLOOR OF CONTROLLED AIRSPACE UNDER FAC				CONTROL AREA
	CONTROL ZONE:		HOURS OPTN	X TRANSITION AREA

6. APPROACH & RUNWAY LIGHTING				
		ALS	X	REIL **12/30 (PCL)**
		(S) SALS		TDZ
		MALS		C/LINE
		HIRL	X	OTHER (Specify) **PAPI 12/30 (PCL)**
	X	MIRL **12/30 (PCL)**		

7. RUNWAY MARKINGS	8. RUNWAY VISUAL RANGE
ALL WEATHER	APPROACH
INSTRUMENT **NPI-F 12/30**	ROLL OUT

9. GLIDE SLOPE		
G S ANGLE:	ELEV RWY THRESHOLD:	
DISTANCE FROM RWY:	ELEV GS ANTENNA:	
	THRESHOLD CROSSING HEIGHT:	

10. FINAL APPROACH COURSE AIMING				
		RUNWAY THRESHOLD	**3000**	F T. FROM THRESHOLD
	X	ON CENTERLINE		F T. FROM CENTERLINE

11. WAIVERS OF STANDARDS	NUMBER OF WAIVERS ON FILE	DATES OF APPROVAL
	NONE	

PART C - REMARKS:

AWOS-3 IS ON SERVICE-A.

PART D - PREPARED BY:	DATE:
SPECIALIST	**08/02/2002**
TITLE:	OFFICE:
AERONAUTICAL INFORMATION SPECIALIST	**AVN-XXX**

Figure A9-10

APPENDIX 10.

STANDARD INSTRUMENT APPROACH PROCEDURE

CONTINUATION SHEET,

FAA Form 8260-10

U.S. DEPARTMENT OF TRANSPORTATION - FEDERAL AVIATION ADMINISTRATION

Special

STANDARD INSTRUMENT APPROACH PROCEDURE

FLIGHT STANDARDS SERVICE - TITLE 14 CFR PART 97.33

Bearings, headings, courses, and radials are magnetic. Elevations and altitudes are in feet, MSL, except HAT, HAA, TCH, and RA. Altitudes are minimum altitudes unless otherwise indicated. Ceilings are in feet above airport elevation. Distances are in nautical miles unless otherwise indicated, except visibilities which are in statute miles or in feet RVR.

Classification: Training and Operational Information Requirements

Instrument Procedure Requirements: This procedure applies GPS nonprecision criteria to operations at a high elevation airport with precipitous terrain.

Operator Requirements: The operator must provide each pilot (and dispatcher, if appropriate) assigned to conduct operations using this approach procedure with ground and flight training and operational information to safely conduct this nonprecision approach procedure to the Aspen-Pitkin County/Sardy Field, Aspen, Colorado (KASE). This training and operational information shall include, but is not limited to: procedure flight profile, airfield lighting and marking, close-in obstacles and nearby terrain, transition from IMC to VMC, use of visual cues in reduced visibility, determining and applying aircraft approach, landing and missed approach climb performance (including the effects of wind, density altitude, aircraft configuration, and gross weight), aircraft control and performance during steep approaches in reduced visibility, crewmember duties and aeronautical decision-making.

Inspector Guidance: The cognizant Principle Operations Inspector (POI) shall evaluate the operator's proposed training program, and, if applicable, General Operations Manual, checklists, or other operational documents, to determine their suitability for supporting safe IFR operations using this Instrument Approach Procedure (see Operator Requirements, above).

CITY AND STATE	ELEVATION: 7820 TDZE: 7737 AIRPORT NAME:	FACILITY IDENTIFIER:	PROCEDURE NO. / AMDT NO. / EFFECTIVE DATE:	SUP:
Aspen, CO	Aspen-Pitkin County/Sardy Field	RNAV (GPS)	RNAV (GPS) Z Rwy 15, Original	AMDT: None DATED:

FAA FORM 8260 - 10 / December 2002 (Computer Generated)

Page 1 of 1 Pages

Figure A10-1

ALL AFFECTED PROCEDURES REVIEWED?	COORDINATES OF FACILITIES	REQUIRED EFFECTIVE DATE
☐ YES ☐ NO		

COORDINATED WITH:

ATA ☐ AAT ☐ ALPA ☐ APA ☐ AOPA ☐ NBAA ☐ OTHER (specify) ☐

FLIGHT CHECKED BY		
NAME:	FIO	DATE:
DEVELOPED BY		
NAME:	FIO **AFS-410**	DATE: **07/15/2002**
APPROVED BY		
NAME:	FIO	DATE:

CHANGES:

REASONS:

Figure A10-2

APPENDIX 11.

FINAL APPROACH SEGMENT DATA BLOCK

DATA REQUIREMENTS

APPENDIX 11. FINAL APPROACH SEGMENT (FAS) DATA BLOCK CYCLIC REDUNDANCY CHECK (CRC) REQUIREMENTS

Content of the FAS Data Block. Each FAS data block contains 20 elements (fields) that include the CRC remainder. The specific order and coding of the fields must be followed rigorously to ensure avionics compatibility. Until the process for electronic transmittal of this data is developed by AVN, the following FAS Data Block information must be documented on FAA Form 8260-10, Continuation Sheet, especially prepared for that purpose (see figures A11-1 and 2). This form will comprise the protected data pending development of an internal CRC process, and will be forwarded to the charting agencies for further processing and CRC protection.

1. Fields needed for the Final Approach Segment (FAS) Data Block record for approaches using WAAS (LPV minima) and are included in the CRC wrap:

Data Field	*Field Size*	*Data Type*
Operation Type	2 characters	Unsigned Integer
SBAS Service Provider Identifier	2 characters	Unsigned Integer
Airport Identifier	4 characters	Alphanumeric
Runway	5 characters	Alphanumeric
Approach Performance Designator	1 character	Unsigned Integer
Route Indicator	1 character	Alpha
Reference Path Data Selector	2 characters	Unsigned Integer
Reference Path Identifier (Approach ID)	4 characters	Alphanumeric
LTP/FTP Latitude	11 characters	Alphanumeric
LTP/FTP Longitude	12 characters	Alphanumeric
LTP/FTP Ellipsoidal Height	6 characters	Signed Integer
FPAP Latitude	11 characters	Alphanumeric
FPAP Longitude	12 characters	Alphanumeric
Threshold Crossing Height (TCH)	7 characters	Alphanumeric
TCH Units Selector (meters or feet used)	1 character	Feet or Meters
Glidepath Angle (GPA)	4 characters	Unsigned Integer
Course Width at Threshold	5 characters	Unsigned Integer
Length Offset	4 characters	Unsigned Integer
Horizontal Alert Limit (HAL)	3 characters	Numeric
Vertical Alert Limit (VAL)	3 characters	Numeric

2. Fields needed for integrity monitoring, and calculated using binary representation of FAS Data Block (as described in RTCA/DO-229C, Minimum Operational Performance Standards for Global Positioning System/Wide Area Augmentation System Airborne Equipment and as amended by TSO-C146A).

Data Field	*Field Size*	*Data Type*
Precision Approach Path Point Data CRC Remainder	8 characters	Hexadecimal

3. Fields not included in the FAS Data Block, but needed for the Precision Approach Path Point record, and which are not CRC wrapped.

Data Field	*Field Size*	*Data Type*
ICAO Code	2 characters	Alphanumeric
LTP Orthometric Height	6 characters	Signed Integer
FPAP Orthometric Height	6 characters	Signed Integer

4. Explanation of data field entries (in the general order they appear in the FAS Data Block):

a. Operation Type. A number from 0 to 15 that indicates the type of the final approach segment.

Example: 0 is coded for a straight-in approach procedure. (Codes for other procedures are reserved for future definition.)

b. SBAS Service Provider Identifier. A number from 0 to 15 that associates the approach procedure to a particular satellite based approach system service provider. For GBAS applications, this data is ignored.

Example: 0 (WAAS)

c. Airport Identifier. The four-character ICAO location identifier assigned to an airport. Where there is a national airport identifier but no ICAO location identifier, the three- or four-character national identifier is used. Where only three characters are provided, the trailing space is to be left blank.

Example: KDEN, YSSY, NZWN, FAEL, 3SL_, OH23

d. Runway. Runways are identified by two characters "RW" followed by the runway number. The fifth character is used where needed to indicate a left (L), right (R), or center (C). Helicopters are indicated by HEL0 without a number (the runway number is 0 as used to calculate the CRC).

Examples: RW26R, RW08L, RW18C, RW02, HEL0

e. Approach Performance Designator. A number from 0 to 7 that identifies the type of approach. An "0" is used to identify an LPV approach procedure and a "1" indicates a Category I approach procedure. Other values are reserved for future use.

Example: 0

f. Route Indicator. A single alpha character (A through Z or blank, omitting I and O) used to differentiate between multiple final approach segments to the same runway or heliport. The first approach to a runway is labeled "Z." Additional alpha characters are incrementally assigned.

Example: Z, Y, X, etc.

g. Reference Path Data Selector (RPDS). A number (0-48) that enables automatic tuning of a procedure by LAAS avionics. The number is related to the frequency of the VHF data broadcast and a

5-digit tuning identifier. The future ICAO SBAS SARPS will provide further information. Always "0" for WAAS operations.

Example: 0

h. Reference Path Identifier. A four-character identifier that is used to confirm selection of the correct approach procedure. This identifier is defined with a "W" signifying WAAS, followed by the runway number. The last character, beginning with the letter "A", excluding the letters "C", "L", and "R", will be used to define the first procedure, followed by a succeeding letter for each procedure to a particular runway. For example, an airport has three parallel runways and the left and right runways have both a straight-in procedure and an offset procedure; the center runway has a straight-in procedure only. The following (extreme) examples would be applicable:

Example: W09A & W09B would define the 2 unique FAS data blocks to RWY 09L.
W09D would be used to define the FAS data block for RWY 09C.
W09E & W09F would be used to define the FAS data blocks for RWY 09R.

NOTE: These suffixes do not have to be in any particular order so as to allow procedures to be added at a later time without changing existing FAS data blocks.

i. Landing Threshold Point (LTP)/Fictitious Threshold Point (FTP) - Latitude. Represents the latitude of the threshold defined in WGS-84 coordinates and entered to the ten-thousandth of an arc second. The most significant bit is the sign bit: 0 = Positive (Northern Hemisphere); 1 = Negative (Southern Hemisphere). However, for documentation purposes, identify the Latitude as follows:

Example: 225436.2125N (11 characters) for 22°54'36.2125" N

j. Landing Threshold Point (LTP)/Fictitious Threshold Point (FTP) - Longitude. Represents the longitude of the threshold defined in WGS-84 coordinates and entered to the ten-thousandth of an arc second. The most significant bit is the sign bit: 0 = Positive (Eastern Hemisphere); 1 = Negative (Western Hemisphere). However, for documentation purposes, identify the Latitude as follows:

Example: 1093247.8780E (12 characters) for 109°32'47.8780" E

k. LTP/FTP Height Above Ellipsoid (HAE). The height expressed in meters reference the WGS-84 ellipsoid, obtained from an official government source. This information is identified in the ASIS database as "Ellipsoid Elevation" and is in "feet" and must be converted to "meters." The first character is a + or – and the resolution value is in tenths of a meter with the decimal point suppressed.

Example: +00356 (+35.6m), -00051(-5.1m), +01566 (+156.6m), -00022 (-2.2m)

l. Flight Path Alignment Point (FPAP) - Latitude. A point located on a geodesic line or an extension of a geodesic line calculated between the LTP and the designated center of the opposite runway-landing threshold. It is positioned at a distance from the LTP to support a prescribed procedure design angular splay and course width, as well as functionality associated with an aircraft. It is used in conjunction with the LTP to determine the lateral alignment of the vertical plane containing the path of the RNAV final approach segment. On shorter runways, the FPAP may be located off the departure end of the landing runway. The latitude of the runway FPAP is defined in WGS-84 coordinates and entered to the ten-thousandth of an arc second. The most significant bit is

the sign bit: 0 = Positive (Northern Hemisphere); 1 = Negative (Southern Hemisphere). However, for documentation purposes, identify the Latitude as follows:

Example: 225436.2125N (11 characters) for 22°54'36.2125" N

m. FPAP - Longitude. The longitude of the runway FPAP is defined in WGS-84 coordinates and entered to the ten-thousandth of an arc second. The most significant bit is the sign bit 0 = Positive (Eastern Hemisphere); 1 = Negative (Western Hemisphere). However, for documentation purposes, identify the Latitude as follows:

Example: 1093247.8780E (12 characters) for 109°32'47.8780" E

n. Threshold Crossing Height (TCH). The designated crossing height of the flight path angle above the LTP (or FTP). The allowable range of values is defined in TERPS table 18A.

Example: 00055.0 (55.0 feet); 00042.0 (42.0 feet)

o. TCH Units Selector. This character defines the units used to describe the TCH.

Example: F = feet M = meters

p. Glidepath Angle. The angle of the approach path (glidepath) with respect to the horizontal plane defined according to WGS-84 at the LTP/FTP. It is specified in degrees.

Example: 02.75 (2.75°), 06.20 (6.20°), 03.00 (3.00°)

q. Course Width at Threshold. The semi-width (in meters) of the lateral course at the LTP/FTP, defining the lateral offset at which the receiver will achieve full-scale deflection. In combination with the distance to the FPAP, the course width defines the sensitivity of the lateral deviations throughout the approach. The allowable range varies from 80m to 143.75m. See Order 8260.50, Table 2-3 to determine course width.

NOTE: When the runway number is set to 00 (for circling approaches or Helicopter procedures), then the course width field is ignored and the course width is 38 meters.

Example 106.75

r. Length Offset. The distance from the stop end of the runway to the FPAP. It defines the location where lateral sensitivity changes to the missed approach sensitivity. The value is in meters with the limits being 0 to 2032m. This distance is rounded to the nearest 8-meter value. If the FPAP is located at the designated center of the opposite runway end, the distance is zero.

Example: 0000, 0424

s. Precision Approach Path Point CRC Remainder. An 8-character hexadecimal representation of the calculated remainder bits used to determine the integrity of the FAS Data Block data during transmission and storage. This information will be computed electronically with use of the electronic transmittal software and documented on Form 8260-10 (see figures A11-1 and A11-2).

Example CRC Remainder: E104FC14

t. ICAO Code. The first two designators of the ICAO location identifier, as identified in ICAO Doc 7910. In the Continental United States, the country code will begin with the letter "K" followed by a numeric character obtained from figure A11-3. Alaska, Hawaii, and U.S. Possessions will be as described in the ICAO Doc 7910.

Example: K1, K7, PH, PA, MM, ER

u. Orthometric Height. The height of the LTP or FPAP, as related to the geoid, and presented as an MSL elevation defined to a tenth of a meter resolution with the decimal point suppressed. For the purpose of documenting this in the "Additional Path Point Record Information," the LTP and FPAP orthometric height will be the same and based on the LTP elevation. The value is preceded by a "+" or "-".

Example: +00362 (+36.2m), +02478 (+247.8m), -00214 (-21.4m)

v. Horizontal Alert Limit (HAL). The HAL is the radius of a circle in the horizontal plane (the local plane tangent to the WGS-84 ellipsoid), with its center being at the true position, that describes the region which is required to contain the indicated horizontal position with the required probability for a particular navigation mode assuming the probability of a GPS satellite integrity failure being included in the position solution is less than or equal to 10^{-4} per hour. The range of values is 0 to 50.8m with a 0.2 resolution. The HAL for LPV procedures developed using Order 8260.50 is a fixed value at 40.0 meters.

Example: HAL 40.0

w. Vertical Alert Limit (VAL). The VAL is half the length of a segment on the vertical axis (perpendicular to the horizontal plane of the WGS-84 ellipsoid), with its center being at the true position, that describes the region which is required to contain the indicated vertical position with a probability of $1\text{-}10^{-7}$ per approach, assuming the probability of a GPS satellite integrity failure being included in the position solution is less than or equal to 10^{-4} per hour. The range of values is 0 to 50.8m with a 0.2 resolution. The VAL for LPV procedures developed using Order 8260.50 is a fixed value at 50.0 meters. When future Precision WAAS becomes available, the VAL fixed value is planned to be 12 meters for these types of procedures.

NOTE: A VAL of 00.0 indicates that the vertical deviations should not be used (i.e., a lateral-only {LNAV} approach.

Example: VAL 50.0 VAL 12.0

U.S. DEPARTMENT OF TRANSPORTATION - FEDERAL AVIATION ADMINISTRATION

Continuation

STANDARD INSTRUMENT APPROACH PROCEDURE

FLIGHT STANDARDS SERVICES TITLE 14 CFR PART 97.33

Bearings, headings, courses, and radials are magnetic. Elevations and altitudes are in feet, MSL, except HAT, HAA, TCH, and RA. Altitudes are minimum altitudes unless otherwise indicated. Ceilings are in feet above airport elevation. Distances are in nautical miles unless otherwise indicated, except visibilities which are in statute miles or in feet RVR.

FAS Data Block information

Data Field	DATA
Operation Type	0
SBAS Service Provider Identifier	0
Airport Identifier	KJAX
Runway	RW31
Approach Performance Designator	0
Route Indicator	
Reference Path Data Selector	0
Reference Path Identifier(Approach ID)	W31A
LTP/FTP Latitude	302842.2400N
LTP/FTP Longitude	0814056.1300W
LTP/FTP Ellipsoidal Height	-00210
FPAP Latitude	302931.7800N
FPAP Longitude	0814203.0100W
Threshold Crossing Height (TCH)	00050.0
TCH Units Selector (meters or feet used)	F
Glidepath Angle (GPA)	03.00
Course Width at Threshold	106.75
Horizontal Alert Limit (HAL)	40.0
Vertical Alert Limit (VAL)	50.0
Length Offset	0
CRC Remainder	688D11EF

Additional Path Point Record Information

ICAO Code	K7
LTP Orthometric Height	+00081
FPAP Orthometric Height	+00081

CITY AND STATE	ELEVATION: 30 TDZE: 25 AIRPORT NAME:	FACILITY IDENTIFIER:	PROCEDURE NO. / AMDT NO. / EFFECTIVE DATE:	SUP:
JACKSONVILLE, FL	JACKSONVILLE INTL	RNAV	RNAV (GPS) RWY 31, ORIG	AMDT: NONE DATED:

FAA FORM 8260 - 10 / March 2003 (Computer Generated)

Page of Pages

Figure A11-1

ALL AFFECTED PROCEDURES REVIEWED?	COORDINATES OF FACILITIES	REQUIRED EFFECTIVE DATE
☐ YES ☐ NO		

COORDINATED WITH:

ATA ☐ AAT ☐ ALPA ☐ APA ☐ AOPA ☐ NBAA ☐ OTHER (specify) ☐

FLIGHT CHECKED BY		
NAME:	FIFO	DATE:
DEVELOPED BY		
NAME:	FIFO	DATE:
APPROVED BY		
NAME:	FIFO	DATE:

CHANGES:

REASONS:

Figure A11-2

Figure A11-3. ICAO Code Numbers

APPENDIX 12.

ARINC 424 DATABASE CODES

APPENDIX 12. ARINC 424 DATABASE CODES

1. WAYPOINT DESCRIPTION CODES. The following Waypoint Description Codes are used by navigation database developers and documented as described in paragraph 851.

Figure A12-1. Waypoint Description Codes

Waypoint Description	***Enroute, STAR, APRCH for the line "Airport as Waypoint"***	**COL**	**COL**	**COL**	**COL**
Type/ Function	**Used On**	**40**	**41**	**42**	**43**
Airport as Waypoint	STAR, APCH	A			
Essential Waypoint[1]	En route, SID, STAR, APCH	E			
Off Airway Waypoint[2]	En route	F			
Runway as Waypoint, Helipad as Waypoint	SID, STAR, APCH	G			
Heliport as Waypoint	STAR, APCH	H			
NDB NAVAID as Waypoint	En route, SID, STAR, APCH	N			
Phantom Waypoint[3]	SID, STAR, APCH	P			
Non-Essential Waypoint[4]	En route	R			
Transition Essential Waypoint[5]	En route	T			
VHF NAVAID as Waypoint	En route, SID, STAR, APCH	V			
Flyover Waypoint, End of SID, STAR Route Type, APCH Transition or Final Approach[6]	SID, STAR, APCH		B		
End of En route Airway or Terminal Procedure Route Type	En route, SID, STAR, APCH		E		
Uncharted Airway Intersection[7]	En route		U		
Fly-Over Waypoint[8]	SID, STAR, APCH		Y		
Unnamed Stepdown Fix after Final Approach Fix[20]	APCH			A	
Unnamed Stepdown Fix Before Final Approach Fix[20]	APCH			B	
ATC Compulsory Waypoint[9]	En route			C	
Oceanic Gateway Waypoint[10]	En route			G	
First Leg of Missed Approach Procedure[11]	APCH			M	
Path Point Fix[19]	APCH			P	
Named Stepdown Fix[18]	APCH			S	
Initial Approach Fix[12]	APCH				A
Intermediate Approach Fix[13]	APCH				B
Initial Approach Holding Fix	APCH				C
Initial Approach Fix with Final Approach Course Fix	APCH				D
Final End Point Fix[16]	APCH				E
Published Final Approach Fix or Database Final Approach Fix[14]	APCH				F
Holding Fix	En route, SID, STAR, APCH				H
Final Approach Course Fix[15]	APCH				I
Published Missed Approach Point Fix[17]					M

2. WAYPOINT DESCRIPTION CODE DEFINITION/DESCRIPTION: Fixes are located at positions significant to navigation in the En route, Terminal Area, and Approach Procedure path definitions. The "Waypoint Description Code" field enables that significance or function of a fix at a specific location in a route to be identified. The field provides information on the type of fix. As a single fix can be used in different route structures and multiple times within a given structure, the field provides the function for each occurrence of a fix. Source/Content: Valid contents for the

"Waypoint Description Code" are contained in figure A12-1. The contents of Column 40 provide information on the fix type. Column 41 is used to define whether the fix is a "fly-over" or "fly-by" fix and to indicate the charting status of some waypoints. Columns 42 and 43 provide the fix function information. Column 40, Code "G," is valid for Runway as Waypoint and Helipad as Waypoint. Explanation of **superscript notes** and other details required to understand figure A12-1:

1. Any waypoint (not NAVAID, Airport, or Runway) in Terminal Procedures or any waypoint (not NAVAID ***or airport***) on En route Airways, required for navigation such as a change in bearing, intersection of two airways, beginning or ending of continuous segment.

2. Any waypoint published by government source but not part of any route structure.

3. A waypoint established during procedure coding on the nominal track.

4. Any waypoint (not NAVAID ***or airport***) on En route Airways that is not considered "Essential" or "Transition Essential."

5. Any waypoint (not NAVAID ***or airport***) on En route Airways for the purpose of transitioning between the En route and Terminal structures.

6. A fly-over waypoint (including NAVAID) specified by the procedure: (a) at the end of a SID or STAR Route Type; (b) at the end of an Approach Transition for FMS, GPS, or MLS/RNAV approach; or (c) at the missed approach point in an Approach Procedure.

7. Any waypoint (not NAVAID ***and airport***) on En route Airways that has not been established by government source. Used only in conjunction with "E" in Column 40.

8. Any waypoint (including NAVAID ***and airport***) that must be over flown before establishing on the following leg.

9. Any waypoint (including NAVAID ***and airport***) on En route Airways at which a "position report" must be made to the appropriate Air Traffic Control unit.

10. Any waypoint (including NAVAID) designated as the start/end of an oceanic organized rack system.

11. Coded on the first leg after a runway fix or missed approach point fix dependent on approach procedure coding rules. The leg may be the first leg of a published missed approach procedure or a leg to the published missed approach point.

12. Any waypoint (including NAVAID) established as an Initial Approach Fix.

13. Any waypoint (including NAVAID) established as an Intermediate Approach Fix and not coded as a Final Approach Course Fix.

14. Any waypoint (including NAVAID) established as a Final Approach Course Fix. This may be a fix published as the Final Approach Fix by a government source or, when no such. fix is published, one established by a data supplier

15. Any waypoint (including NAVAID) established as a Final Approach Course Fix. This may be a fix published as the Final Approach Course Fix by government source or, when no such fix is published but yet required, one established by a data supplier.

16. Any waypoint established as the Final End Point. This may be a fix published as the FEP by the government source or, when no such fix is published but yet required, one established by the data supplier. It is used in vertical coding of nonprecision approach procedures.

17. Any waypoint (including NAVAID or Runway) established as a Missed Approach Point by government source. The code is used in conjunction with "G" in Column 40 when the Runway is the published Missed Approach Point.

18. Any waypoint established and named by the government source lying between the Final Approach Fix and the Missed Approach Point or between a published Final Approach Course Fix and a Final Approach Fix.

19. Any waypoint established by the government source in support of RNAV-GPS/GLS Approach Procedures. Path Points are not part of the defined procedure track but are provided in a separate record where required. The points are not named and are always referred to as Path Point 1 and Path Point 2.

20. Any published but unnamed waypoint lying between the Final Approach Fix and the Missed Approach Point (Code "A") or between the Final Approach Course Fix and the Final Approach Fix (Code "B").

NOTE 1: Column 40, the fix type column, may be blank when a particular leg of a procedure does not include a fix, such as those legs ending in intercepts or terminating altitudes.

NOTE 2: With the rules provided for Columns 42 and 43, as further explained by references 11 and 17, it is possible to have the code "M" in both of the columns for one leg in cases where a runway fix which is not the designated missed approach point has been inserted into the procedure coding.