U.S. Department of Transportation
Federal Aviation Administration

General Aviation Airworthiness Alerts

AC No. 43-16

ALERTS

ALERT NO. 232
NOVEMBER 1997

Improve Reliability-Interchange Service Experience

CONTENTS

AIRPLANES

BEECH 1
BELLANCA 5
CESSNA 5
PIPER 8
ROCKWELL 10

HELICOPTERS

BELL 11
McDONNELL DOUGLAS 11
SCHWEIZER 11

AMATEUR, SPORT, AND EXPERIMENTAL AIRCRAFT

CHRISTIAN 12
KIT FOX 12
PITTS 12

ACCESSORIES

FAULTY FIRE EXTINGUISHER 12
FUEL PUMP LEAKS 13
DEFECTIVE INSTRUMENT AIR FILTERS 13

AIR NOTES

AIRWORTHINESS DIRECTIVES (AD'S) ISSUED IN SEPTEMBER 1997 14
A TRIBUTE TO THE FORGOTTEN MECHANIC 14
ALERTS ONLINE 16
ELECTRONIC AVAILABILITY OF INFORMATION 16
PROPOSED CHANGES TO THE FAA SERVICE DIFFICULTY PROGRAM 17
SUSPECTED UNAPPROVED PARTS SEMINAR 18
FAA FORM 8010-4, MALFUNCTION OR DEFECT REPORT 18
SUBSCRIPTION REQUEST FORM 19

Contents of this publication are informational only. Due to the need for extensive distribution of this publication, only one copy is provided to an addressee; however, this publication may be duplicated.

U.S. DEPARTMENT OF TRANSPORTATION
FEDERAL AVIATION ADMINISTRATION
WASHINGTON, DC 20590

GENERAL AVIATION AIRWORTHINESS ALERTS

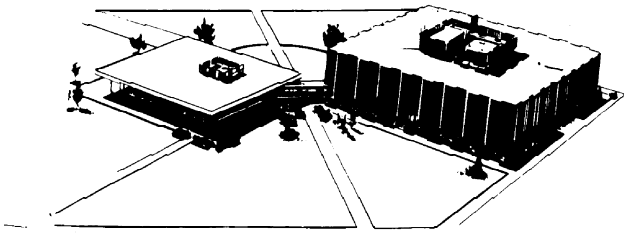

FLIGHT STANDARDS SERVICE
Mike Monroney Aeronautical Center

The General Aviation Airworthiness Alerts provide a common communication channel through which the aviation community can economically interchange service experience and thereby cooperate in the improvement of aeronautical product durability, reliability, and safety. This publication is prepared from information submitted by those of you who operate and maintain civil aeronautical products. The contents include items that have been reported as significant, but which have not been evaluated fully by the time the material went to press. As additional facts such as cause and corrective action are identified, the data will be published in subsequent issues of the Alerts. This procedure gives Alerts' readers prompt notice of conditions reported via Malfunction or Defect Reports. Your comments and suggestions for improvement are always welcome. Send to: FAA; ATTN: Designee Standardization Branch (AFS-640); P.O. Box 25082; Oklahoma City, OK 73125-5029.

AIRPLANES

BEECH

Beech Model H-18 — **Vertical Fin Damage 5531**

During a scheduled inspection, cracks were found on the left vertical stabilizer.

It appeared the cracks originated at the upper lightening hole of the lower section of the vertical stabilizer front spar (P/N 186201-2). When slight hand pressure was applied on the skin, the cracks enlarged. The submitter did not offer the cause of this defect; however, this area should be inspected at every opportunity.

Part total time-8,654 hours.

Beech Model F33A Bonanza — **Instrument Air System Filter Damage 3610**

During a scheduled inspection, the instrument standby air pressurization system filter was found damaged.

Heat damaged the filter (P/N 35-324490-3) and melted the plastic housing. The filter element was scorched to a charcoal brown color, and the instrument air system was open to the atmosphere. The filter was located in the aircraft engine compartment. An inspection of the surrounding area did not disclose any evidence of engine exhaust system leakage or other defects. The submitter did not state the source of the heat which caused this damage.

Part total time-601 hours.

Beech
Model T-34A

Defective Nosewheel Steering
3251

While the aircraft was taxiing, a squeaking sound was heard. The sound seemed to originate in the nosewheel area.

When the aircraft was in the hangar and on "jacks," the source of the squeaking sound was isolated to the nose steering rod idler arm (P/N 35-825052-2). The idler arm was "frozen" in position. The pilot heard the squeaking sound when the idler arm was "forcibly" moved.

After the idler arm assembly was soaked in penetrating oil for several days and considerable force was used, the idler arm separated from the shaft. The idler arm should move "freely" on the shaft, and there should not be any binding or obstruction of movement. The bolt used to connect the idler arm to the steering link was bent.

Due to the location of the idler arm, inspection and service are difficult. The collar and shaft must be removed to provide proper inspection and service.

The 43-year old aircraft was operated in a salt-air environment, and was not "regularly lubricated." The "Oilite" bearing should be included as a regular part of the landing gear lubrication schedule.

Part total time-5,308 hours.

Beech
Model K-35
Bonanza

Ruddervator Push-Pull Rod Damage
2720

While complying with the requirements of Airworthiness Directive (AD) 97-06-11, the left ruddervator push-pull rod (P/N 35-524106-6) was found to contain water.

AD 97-06-11 requires removal of the paint from the push-pull rod to facilitate dye-penetrant inspection. When the paint was removed, a hole, which was approximately .25 inch in diameter, was found at the lower forward end of the rod. (Refer to the following illustration.) Corrosion originated in the interior of the rod and progressed through the wall thickness. This area is not visible during normal inspections. The paint coating was still covering the damaged area. Rain water and other contaminates may seep past the rod-end threads or find other entry points to the interior of various flight control push-pull rods. During a period of time, moisture may collect and cause corrosion damage. Any evidence of interior moisture in a control rod should be thoroughly investigated.

Part total time-5,045 hours.

Beech
Model A36
Bonanza

Inoperative Emergency Exit
5520

During an annual inspection, the emergency exit window on the left side of the cabin would not open.

Further inspection disclosed the emergency exit window had been sealed. In an effort to protect the cabin from water leakage, sealant was applied to the rubber seal (P/N 002-430008-287). It is an excellent idea to prevent water from entering the cabin; however, in an emergency, egress from the cabin is more important than keeping the carpet dry. An emergency exit should never be sealed.

Part total time-370 hours.

Beech Model 58 Baron

Nose Landing Gear Door Failure 5280

A ground observer informed the pilot that the nose landing gear doors were still open after the nose gear had been retracted. The pilot stated there had been some unusual noises coming from the nose area of the aircraft during recent flights.

An inspection revealed the lower portion of the cam-plate slot on the shaft (P/N 002-410038-1), which is used to close the nose gear doors, had broken. (Refer to the following illustration.) The fracture area had been polished smooth by the cam pin which would indicate that this defect had been present during several previous flights. These parts are located in an area which is easily accessible for inspection. The submitter suggested these parts be given close attention during inspections and maintenance. Beech Service Bulletin (SB) 2601 addresses this subject; however, SB 2601 is not applicable to Model 58 aircraft. It was suggested that the manufacturer consider either revising SB 2061 to include Model 58 aircraft or issue a separate SB for Model 58 aircraft.

Part total time-2,599 hours.

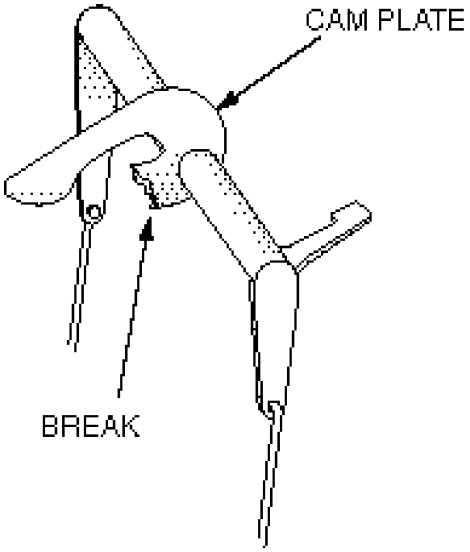

Beech Model B60 Duke

Main Landing Gear Retraction System Failure 3230

During a scheduled inspection, the main landing gear downlock cable was found broken.

An investigation disclosed that the downlock cable (P/N 60-810089-5) terminal end had broken at the threads used for adjustment and attachment to the clevis terminal (P/N AN665-10R). (Refer to the following illustration.) The terminal end safety wire had been routed through the clevis fork and was still holding the broken cable terminal to the clevis terminal. The safety wire kept the retraction system operational; however, it may have failed at any time. The threaded terminal end broke where it entered the clevis threads. The submitter stated the broken cable terminal end displayed evidence of being bent, possibly more than once, at the failure point. A “boot” covers the assembly and protects it from contamination. The “boot” must be removed before this area can be inspected.

Part total time-2,076 hours.

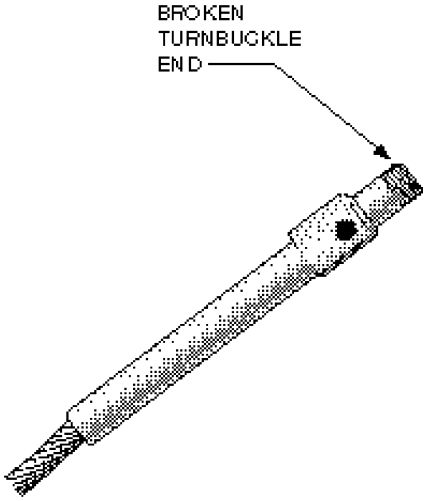

Beech Model C-90A King Air — **Elevator Control Linkage Failure 2730**

During a preflight inspection, the pilot found the left elevator trim tab was loose.

Further inspection disclosed the trim tab control rod (P/N 50-524474-13) was broken. The bushing, which was installed at the trim tab attachment end of the control rod, had seized. The submitter speculated that the rod was immobilized, which induced a “side load” on the assembly, and the rod failed. The control rod was broken at the bottom of the adjustment threads, and there was evidence of a pre-existing crack at the fracture site. The pre-existing crack had penetrated approximately one-third of the control rod diameter. The cause of this defect may have been long-term exposure to the environmental elements resulting in corrosion of the bushing.

Part total time-3,489 hours.

Beech Model 300 King Air — **Air-Conditioning System Failure 2110**

The pilot reported the air-conditioning system was inoperative.

Troubleshooting the system revealed the quill drive shaft (P/N 115-555025-9) for the compressor drive on the right engine was damaged. The aft spline on the shaft and the pulley spline were both worn. The drive shaft bearings were not binding or worn, and appeared to be in good condition. The spline at the engine accessory case end of the drive shaft was in serviceable condition. Since this damage occurred during 255 hours of aircraft operating time, the submitter questioned the integrity of the part.

Part total time as previously stated.

Beech Model 400A Beechjet — **Landing Gear Cable Damage 3230**

During a scheduled inspection, the left main landing gear emergency release cable was found severely damaged.

The cable (P/N 128-380021-29) was kinked. There were numerous broken strands where the cable entered the terminal at the uplock release end, and the cable was close to complete separation. (Refer to the following illustration.) If the cable had separated, the left main gear would not have extended. The submitter stated finding two other like aircraft with broken landing gear emergency release cables, and all of the failures were similar. The cable is covered with plastic, which is terminated approximately 1 inch from the terminal end, to allow for proper swaging of the fitting. The cables typically fail between the end of the plastic covering and the swaged terminal fitting.

Part total time-1,392 hours.

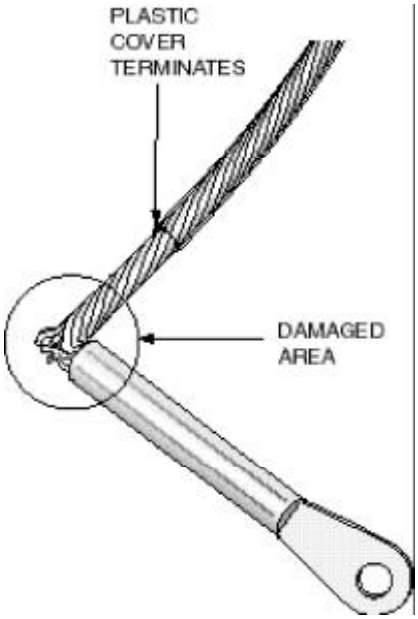

BELLANCA

Bellanca Model 8GCBC — **Rough Engine Performance 7160**

After an annual inspection, the owner flew the aircraft. The owner reported the engine performance was very rough. The engine performance improved slightly when the mixture control was moved to an excessively lean position for normal operation.

The Bracket air filter element (P/N BA8103-1) was removed, and an engine operational test was performed. During the test, engine operation was normal through all of the operating parameters. A new paper induction system filter (P/N P10-6150) was installed. The results of a repeat engine operational test and flight test were normal. Although there was no mention of the condition of the Bracket air filter element, the submitter stated: "The solution that is applied to the Bracket filter element was restricting proper airflow to the engine." The same submitter related a similar discrepancy involving a Cessna Model R182 aircraft.

Part total time-1 hour.

CESSNA

Cessna Model 150 Commuter — **Engine Mount Damage 7120**

During a scheduled inspection, the rudder control cables were found excessively loose and were resting on the lower fuselage skin.

An investigation revealed that the engine mount (P/N 0451120-1) had separated from the lower strut collar. This allowed the strut to move forward causing excessive slack in the rudder cables. This aircraft was used for training, and the submitter suspected that a "nose gear first" landing may have caused this damage.

Part total time-5,406 hours.

Cessna Model 172RG Cutlass — **Right Main Landing Gear Damage 3230**

During a "high-powered" engine operational test, the right wheel brake failed.

The lower side of the aircraft was covered with hydraulic fluid, and the leak source was found to be the right main gear pivot assembly (P/N 2441100-9). Hydraulic fluid was leaking past the spline of the pivot assembly. The submitter stated that cracks in the spline area usually indicate the pivot assembly has failed. This failure will prevent the landing gear from extending. The failure was confirmed after disassembly. In accordance with Cessna Service Bulletin SEB 90-1R2, the actuator should be removed and an inspection for cracks should be conducted. This inspection should be accomplished after the first 2,000 operating hours and repeated each 250 operating hours thereafter.

Part total time-3,254 hours.

Cessna Model 172RG Cutlass — **Inoperative Elevator Trim System 2731**

During flight, the pilot noticed that the elevator trim did not respond to inputs from the control wheel.

While inspecting the system, it was discovered that the "grooved" pins had fallen out of the actuator (P/N 1260074-1). These pins attach the actuator gear to the shaft. The elevator trim wheel moved normally; however, the trim tab remained in one position. The submitter did not offer a cause or cure for this defect.

Part total time-4,652 hours.

Cessna Model 175 Skylark — **Firewall And Engine Mount Damage 5346**

The aircraft was delivered to a repair station because the engine cowling did not fit properly.

During an examination, the right upper engine mount stringer support assembly (P/N 0513131-4) was discovered to be severely cracked. The stringer cracked and bent where the upper right engine mount bolt passed through the mounting bracket. Complete failure of the stringer and the engine mount was imminent. The firewall attachment rivets had been "ripped out" for approximately 8 inches in each direction. The engine weight caused the firewall to be distorted in a forward direction by approximately 1.5 inches. The cowling was displaced and would not fit properly. The exact cause of this damage could not be determined. This aircraft had been used for flight training, and the submitter suspected hard landings may have caused this problem. In the early stages, this type of damage is most evident by inspection of the cabin side of the firewall. This area is difficult to properly inspect; however a good inspection may be very beneficial.

Part total time-2,900 hours.

Cessna Model 177 Cardinal — **Improper Propeller Control Linkage Installation 6120**

Following an annual inspection, an engine operational test revealed the propeller control was very sensitive, and the engine produced a maximum of 1900 RPM.

An investigation disclosed that the propeller control linkage had been connected to the propeller governor lever using an attachment hole which did not allow full travel of the governor lever. After the linkage was connected to the proper attachment hole, the engine and propeller performed properly. Close attention to detail may have averted this dangerous, embarrassing, and costly situation.

Aircraft total time-1,170 hours.

Cessna Model 185 Skywagon (Amphibious) — **Wing Flap Damage 5753**

During an annual inspection, the wing flaps would not fully retract.

An investigation disclosed there were several sheared rivets in the right wing flap inboard track. The broken fasteners were located at the forward lower track attachment point. The wing flap track attachment bracket, which was installed on the flap well skin, was cracked. During the previous year, the left wing flap inboard track had been replaced. This aircraft had been operated "full time" on amphibious floats which may have contributed to this defect.

Part total time-2,249 hours.

Cessna Model U206 Series Super Skywagon — **Elevator Flutter 5520**

A report was received from the Civil Aeronautics Authority of Finland citing several incidents of elevator flutter.

One report stated a parachute jump flight was being conducted, the jumpers had departed, and during the descent elevator flutter was experienced. The airspeed was 100 MPH and the elevator flutter was marked by fast and heavy movements which were 2 to 3 seconds in duration. When the airspeed was slowed to 80 MPH, elevator control returned to normal. After an inspection, the elevator trim actuator was discovered to be loose from the broken stabilizer bracket. This allowed the trim tab to have approximately 2 inches of free movement.

During a parachute jump, the same aircraft experienced the same type of incident. After the jumpers departed, the elevator was trimmed nose down for a 150 MPH descent which produced a vibration. The vibration disappeared when the airspeed was slowed to 130 MPH.

Maintenance personnel discovered that the cause of the second incident was the same as the first incident.

These incidents prompted a more thorough investigation which revealed that the elevator trim tab and the elevator may have been severely out of balance. The out-of-balance condition was caused because the urethane core, used for the trim tab and elevator trailing edge, contained moisture. The trim tab was weighed and was approximately twice the weight of a new unit. Neither of these surfaces could be brought into a balanced condition.

This report has been forwarded to the responsible FAA aircraft certification office for appropriate action.

Aircraft total time-4,983 hours.

Cessna Model 402C Businessliner — **Flightcrew Seat Support Structure Damage 5347**

During a scheduled inspection, cracks were found in the pilot's seat supporting structure.

The cracks were found in two gussets (P/N's 5011011-7 and -10). The gussets were located below the cockpit floor. Each gusset was cracked just beneath the floor line at the top of the gussets. (Refer to the following illustration.) The submitter recommended the manufacturer authorize the installation of doublers on these gussets or construct them from more substantial material. This defect was reported for two like aircraft of the submitter's fleet. Although no cause for this type defect was given, age and metal fatigue may have been contributing factors.

Part total time-11,500 hours.

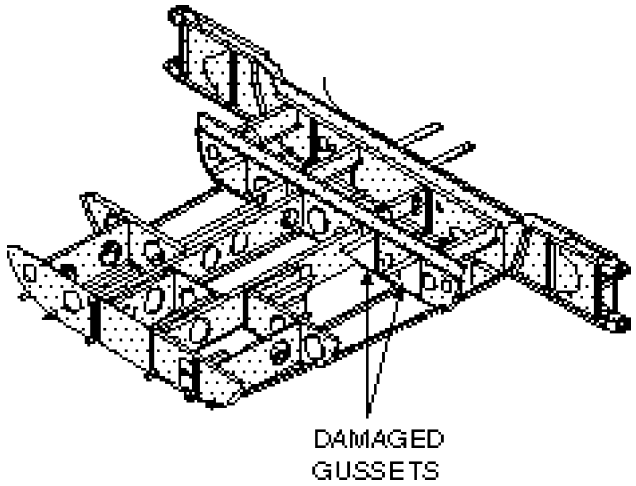

Cessna Model 441 Conquest — **Wing Rib Cracks 5712**

During a scheduled inspection, the left and right wing canted ribs were found cracked.

The canted ribs (P/N's 5722206-1 and -2) were cracked at the top cap, and it appeared the cracks originated at the aft side of the forward wing spar and ran aft, parallel to the bend radii. Metal fatigue was the suspected cause of these defects. This area should be closely checked during inspections and maintenance.

Part total time-4,450 hours.

Cessna Model 550 Citation — **Improper Flight Control Cable Terminal 2710**

During a scheduled inspection, an aileron control cable was found with broken strands.

The cable (P/N 14550-776-45) was removed, compared with a new cable, and one of the terminal ends of the new cable was different.

The manufacturer was contacted, and it was verified that one terminal end on the new cable was improper. The improper terminal end was a “clevis-type” fitting rather than an “eye-type” fitting. The manufacturer purged four other improperly manufactured cable assemblies from their stock. Prior to installation, all new parts should have a “receiving inspection.”

Part total time-0 hours.

PIPER

Piper
Model PA 23-150
Apache

Elevator Hinge
Damage
5520

While the inspection requirements of Airworthiness Directive (AD) 63-26-03 were being complied with, the elevator hinge was found damaged.

The left outboard elevator hinge bracket was found cracked across the attachment lobe. (Refer to the following illustration.) This hinge bracket is not a part of AD 63-26-03. The cracked hinge bracket was found when the elevator torque tube was removed, and the elevator was hanging in a vertical position. In-flight failure of the hinge bracket could result in a catastrophic accident.

Part total time not reported.

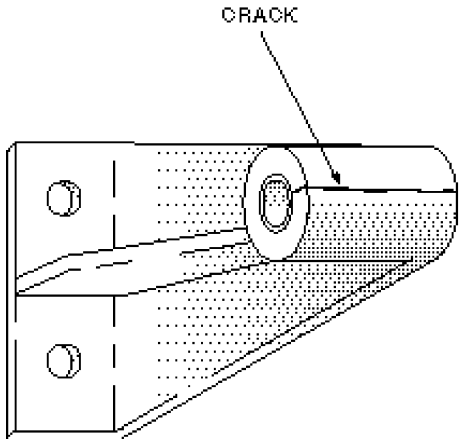

Piper
Model PA 23-250
Aztec

Airframe Structural
Damage
5315

During a scheduled inspection, the rear baggage compartment floor was found to have severe structural damage.

This aircraft was used strictly for carrying cargo. It appeared the damage was the result of extreme abuse while loading and unloading cargo. Both of the floorboard support channels (P/N’s 32057-02 and -03) were broken from their attachment to the left and right side channel support assemblies (P/N 32038-00). The center bulkhead support (P/N 32047-00) was crushed and distorted. (Refer to the following illustration.) This damage severely compromised the structural integrity of the airframe, and an in-flight separation could have occurred.

Part total time-7,586 hours.

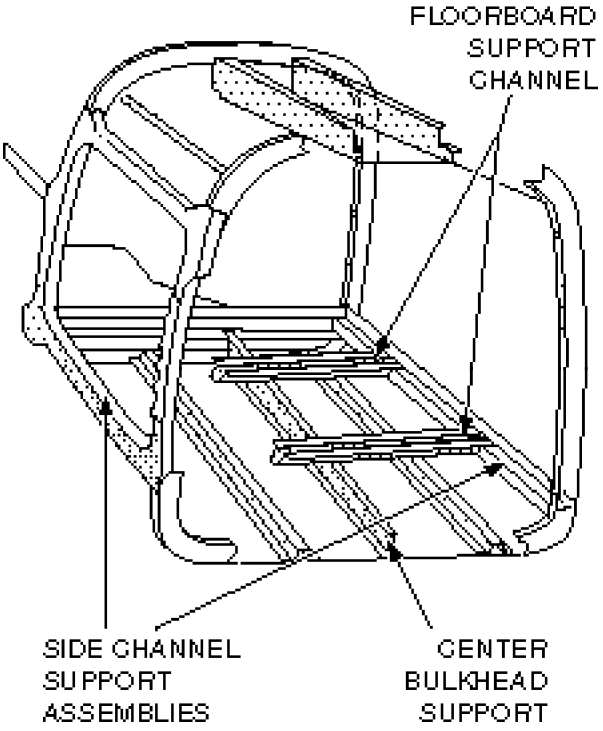

Piper
Model PA 23-250
Aztec

Main Landing Gear
Structural Defects
5743

Structural defects on the left and right main landing gear were found during a regular inspection.

The left and right inboard and outboard drag link supports (P/N 17420000102-03) were found cracked. The cracks were found at the bottom aft side of each drag link support. All of the associated bolts were loose, and the bolt holes were "egg-shaped." All of the trunnion support pad bolts and the aft reinforcement channel bolts were loose. The submitter stated that closer attention during scheduled inspections might prevent serious personal injury or aircraft damage.

Part total time-4,403 hours. Aircraft time since annual inspection-85 hours.

Piper
Model PA 24-260
Comanche

Defective Fuel
Injection Servo
7320

The mechanic/pilot reported in-flight engine roughness which seemed to abate after excessive leaning of the mixture. After landing, engine power could not be maintained due to an excessively rich fuel mixture.

An investigation revealed the fuel injector servo seal (P/N 2539561) was leaking. The fuel passed into the air chamber which caused the mixture to be excessively rich. The submitter experienced a similar problem on another like aircraft and questions the integrity of the fuel servo seal.

Part total time-30 hours.

Piper
Model PA 31T
Cheyenne

Defective Heater
2140

During an inspection, the combustion heater failed a pressure-decay test.

Although not required by Airworthiness Directive (AD) 96-20-07, the manufacturer recommends a pressure-decay test after the first 500 hours of operation and again after each 100 hours of operation. The heater was removed, and further examination revealed a cracked weld at the combustion head retaining flange. Since cold weather is fast approaching, it would be wise to give your aircraft heating system some extra attention. Failure of this system will, at the very least, cause some occupant discomfort and, at worst, can be fatal.

Part time since overhaul-165 hours.

Piper
Model PA 31T1
Cheyenne

Rudder Corrosion
5540

During a 100-hour inspection, a rivet was found to be missing from the bottom of the rudder.

This empty rivet hole was located where the torque tube (P/N 40040-007) was attached to the bottom rudder rib (P/N 40039-003). A closer inspection disclosed the empty rivet hole was corroded. When the skin was loosened for a better look, the steel torque tube and the bottom rudder rib were found heavily corroded. The submitter speculated this defect may have been caused by plugged drain holes and/or dissimilar metals being in contact with each other. It was recommended that the drain holes be kept open and the area be inspected frequently for signs of corrosion.

Part total time-6,432 hours.

Piper
Model PA 31-350
Chieftain

Oil System Relief
Valve Malfunction
7931

The engine installed in this aircraft was a Textron Lycoming Model TIO-540. It was reported that the oil temperature was high during normal engine operation.

This problem was caused by the seat coming loose in the engine accessory case for the "Vernatherm" oil system relief valve (P/N 53E49600). The seat obstructed positive oil flow to the oil cooler. The wear pattern on the relief valve and the seat indicated the seat may have been installed at an angle (cocked).

This topic was the subject of 91 other reports entered into the FAA Service Difficulty Program data base.

Part total time not reported.

Piper
Model PA 32R-300
Cherokee Lance

Electrical System Failure
2400

The pilot reported a complete aircraft electrical system power failure. All attempts to lower the landing gear using both the normal and emergency systems also failed. A successful emergency landing was made.

Failure of the electrical system was traced to the voltage regulator (P/N 557-337). The emergency landing gear extension system failed because the lever would not fully depress to allow release of hydraulic system pressure for the gear to free fall. A molding cover trim (PK) screw had backed out, and the head was found to restrict full travel of the emergency gear lever. A considerable amount of aircraft damage could have been averted had the (PK) screw been in its proper place!

Part total time 450 hours.

Piper
Model PA 32R-301
Saratoga

Landing Gear Failure
3230

The pilot stated that the landing gear "in-transit" light illuminated while the gear selector lever was in the "up" position. The landing gear control/light circuit breaker opened and could not be reset. The landing gear was manually extended, and a safe landing was made.

During an inspection, the landing gear "up" relay was found internally shorted. The landing gear motor remained "on," the nose gear actuator seals failed, all of the hydraulic fluid from the hydraulic powerpack was dumped, and the hydraulic pump failed because the pressure switch did not shut off the motor. It was determined that the landing gear "up" and "down" relays were rated for 12 volts and had been installed in a 24-volt system.

Part total time-30 hours.

Piper
Model PA 34-200T
Seneca

Broken Empennage Fasteners
5553

During a scheduled inspection, rivets on both sides of the vertical stabilizer were found sheared.

These rivets were located where the vertical stabilizer was attached to the empennage structure, and all of the eight rivets had failed. This condition presents a very serious structural compromise and a hazardous operational safety situation. The submitter stated this was the sixth aircraft discovered to have some or all of these fasteners broken.

Part total time not reported.

ROCKWELL

Rockwell
Model 112

Nose Landing Gear Downlock Switch Improper Installation
3260

The aircraft was delivered to maintenance due to "erratic operation" of the nose landing gear down indication.

An inspection of the system revealed the nose landing gear "Micro Switch" was installed to the full forward limit on the mounting bracket. The mounting bracket was attached to the engine mount using "hose clamps." The bracket was positioned too far aft, which prevented proper adjustment of the "Micro Switch." The submitter stated the manufacturer's maintenance manual did not contain information for adjustment of the bracket.

Part total time not reported.

HELICOPTERS

BELL

Bell Model UH-1E Huey — **Broken And Loose Stabilizer Bar Mounting Fasteners**

During a daily inspection, two bolt heads were discovered to be broken and missing, and the remaining attachment bolts were loose.

These bolts were used for attachment of the stabilizer bar (P/N 540-011-300-009). The maintenance records indicated one of the bolts was found loose 110 hours prior to this occurrence. The submitter could not offer a cause for this defect. However, it was recommended that the manufacturer authorize the use of bolts (P/N NAS 1306) and washers (P/N A9960-616) in place of the military configuration which uses bolts (P/N AN6H) and washers (P/N MS20002C6). This hardware improvement would provide a higher tensile strength bolt and more head area contact on the washer.

Part total time-1,448 hours.

Bell Model 222 — **Engine Fuel Starvation 2823**

After the engine failed during flight, a safe autorotation landing was made.

An investigation revealed the engine fuel shutoff valve control switch (P/N 10648BH1-1) had vibrated loose, shorted electrically, and caused the shutoff valve to close. The submitter suspected the switch internal mechanical lock failed allowing the switch body to vibrate and rotate. It was recommended the switch be replaced after 7,500 cycles based on four switch cycles per hour of operation plus 1,500 cycles for maintenance operations. The “fabric covering” should be checked for “ballooning” before, during, and after each flight.

Part total time-1,586 hours.

McDONNELL DOUGLAS

McDonnell Douglas Model 369D — **Fuel Filter Bypass Switch Failure**

While a test was being conducted during a scheduled inspection, the fuel filter bypass switch (P/N 369H8144-3) failed.

The switch did not close at the limits prescribed in the manufacturer’s maintenance manual. The submitter stated this was the seventh switch failure in the past 10 months. It was recommended that the manufacturer establish a mandatory inspection interval of 100 hours for this switch assembly. A similar report was published on page 13 of the July 1997 edition of this publication.

Part total time-301 hours.

SCHWEIZER

Schweizer Model 269C-1 — **Throttle Control Obstruction 7603**

During the first flight following an annual inspection, the throttle stuck at the “full power” position. The throttle control moved freely until the “full power” position was reached.

Both of the helicopter occupants were mechanics as well as rated pilots, and while attempting to free the throttle, they discovered the control cover panel (P/N 269A4066-1) was causing the obstruction. This panel was located between the two pilot seats and had a retaining lip, which should have been tucked under the structure next to the pilot’s seat. Because the lip of the panel was not tucked under the seat structure, the panel interfered with the throttle bellcrank.

It is recommended that care be taken while installing this panel to ensure it does not interfere with the throttle or any other components.

Part total time-not reported

AMATEUR, SPORT, AND EXPERIMENTAL AIRCRAFT

CHRISTIAN

Christian
Model Eagle II

Tailwheel Spring Failure
3220

During a landing the tailwheel contacted the runway, and then "departed" the aircraft.

An inspection revealed the tailwheel spring, which was made of a composite material, had broken. The submitter stated the manufacturer's parts manual shows a steel leaf spring as original equipment. There was no indication of when or why the composite spring was installed.

Part total time-597 hours.

KIT FOX

Kit Fox

Landing Gear Failure
3213

While the aircraft was being taxied to the parking ramp after landing, the left main landing gear collapsed.

The landing gear tie strut failed at a weld joint. There was evidence of corrosion adjacent to the fracture point, and it appeared there had been a pre-existing crack at this point. The submitter stated the fracture site had been "cold welded" during manufacture.

Part total time-178 hours.

PITTS

Pitts
Model S2B

Defective Fabric Covering
5330

During an annual inspection, the fabric covering on the top inboard section of the top right wing was found loose. The fabric was not torn and had no visible sign of defects. The entire aircraft had been covered with grade "A" cotton fabric.

By using a suction cup, it was possible to lift the fabric from the top and bottom wing ribs. The fabric was checked and passed a "punch" test. When the fabric was cut open, it was discovered that the rib lacing cord was broken. The rib lacing cord was waxed cotton and failed when "pull" tested.

Even though the lacing cord is "new," that does not indicate it will pass a "pull" test. This condition produced very costly results and created a hazard to flight operations.

Aircraft total time-350 hours.

ACCESSORIES

FAULTY FIRE EXTINGUISHER

The following report was submitted by a repair station authorized to perform maintenance on fire extinguishers.

A "Kid" aircraft liquid-type fire extinguisher was received to be overhauled. Before the fire extinguisher was disassembled, a functional test was performed. There was a strange thump and vibration when the carbon dioxide cartridge was discharged into the extinguisher. When the agent discharge lever was activated, the extinguishing agent did not discharge.

An investigation revealed the interior of the fire extinguisher cylinder was severely contaminated with a fluid which smelled like

lacquer thinner. The fluid was poured into a container, and a layer of flammable liquid was found on top of the antifreeze. The siphon tube was coiled inside the cylinder, the bottom of the cylinder was corroded, and the metal plating was flaking.

Sometimes aviation safety equipment is the most neglected equipment on our aircraft. It just sits there giving no indication of its serviceability or status. The gauge reads "in the green" and has been there for many years! (Maybe it is frozen in position.) Emergency equipment should be given a very high priority during inspections and maintenance. This equipment's sole purpose is to save your skin during in-flight emergencies. This equipment should be pampered so that it will perform its intended function when it is needed!

Part total time not reported.

FUEL PUMP LEAKS

Lear Romec Models RG9080, RG9580, And RG9570	**Engine Driven Fuel Pumps 7314**

Information for this article was furnished by the National Transportation Safety Board (NTSB) office located in Atlanta, Georgia. The NTSB recommended that the FAA issue an Airworthiness Directive (AD) which would require compliance with Lear Romec Service Bulletin (SB) 101SB020.

Fuel leaks associated with these three fuel pump models have been identified by the NTSB as the cause of three aircraft accidents. In each of these accidents, an engine fire developed. Two of the accidents involved Piper Model PA 31-350 aircraft, and the other accident involved a Piper Model PA 23-250 aircraft. The origin of the reported fuel leaks is located at the fuel pump relief valve gasket. SB 101SB020 describes actions to be taken to ensure that the relief valve cover screws are tightened to the correct torque.

It was recommended that all operators and/or maintenance entities comply with the SB 101SB020 as soon as possible.

DEFECTIVE INSTRUMENT AIR FILTERS

Rapco, the manufacturer of in-line instrument air pressure filters, has reported occurrences of cracked and broken clear plastic filter cases. The filters are located between the vacuum pump pressure outlet port and the flight instruments and are intended to remove carbon particles.

The manufacturer reported the filters failed due to a "vendor manufacturing change." The vendor moved the sonic weld machine and housings into a high humidity area. Due to the plastic's higher moisture content, the sonic weld time was doubled. If the aircraft is flown in high temperature/low humidity conditions, the housings will crack and break open; thereby, causing the loss of all pressure-driven instrumentation.

Rapco ceased production of these filters (P/N's RA-1J4-4, -6, and -7) and stated that three lots of suspect filters were produced in February 1997. The lot numbers are: 05597 with 149 units, 07797 with 153 units, and 12597 with 342 units. These lot numbers represent 644 units out of approximately 1,200 produced during the specified time period. The filters were sent primarily to "parts" distributors, and then to customers. Some of the suspect air filters were retained in the manufacturer's stock and have been removed. Some of the air filters, bearing the part number given previously, were manufactured using a metal case and may not be defective.

The FAA has issued Airworthiness Directive (AD) 97-16-10, dated July 31, 1997, which contains specific information regarding these

filters. Please refer to the AD for specific aircraft applicability. The AD states the urgency of removing the defective air filter from service.

AIR NOTES

AIRWORTHINESS DIRECTIVES (AD'S) ISSUED IN SEPTEMBER 1997

97-15-13R1 Raytheon (Beech 1900, 1900C, and 1900D) airplanes which require installing lubrication fittings in air stair.

97-20-11 Socata Aerospatiale TBM 700 airplanes which require replacing corroded MLG parts.

96-12-03R1 Aviat S-1 and S-2 models which require inspecting aft lower fuselage wing fittings.

97-18-11 Priority letter on Bell 204 helicopters which requires inspection of tail boom vertical fin spar.

97-19-09 Bell 214ST helicopters which require creation of history card.

97-19-10 Sikorsky S-64E helicopters which require inspections of main gear box.

97-20-09 Bell restricted category rotorcraft which involve failure of tail boom vertical fin spars.

97-19-06 Sikorsky S-61 rotorcraft which require inspecting main rotor blade assemblies.

97-20-04 Enstrom F-28 and 280 series helicopters which require inspection of voltage control system.

97-20-13 Eurocopter Deutschland EC135 rotorcraft which require inspection for cracks on stator blades and tail rotor.

97-19-14 Pratt & Whitney JT8D series engines which require inspections of low pressure turbine blade sets.

97-19-13 Pratt & Whitney JT8D-200 series engines which require inspection of temperature indicators.

97-19-12 Pratt & Whitney JT8D series engines which require fluorescent penetrant inspections.

97-19-18 AlliedSignal TSCP700-4B and -5 auxiliary power units which require restretching tie rods.

97-19-17 General Electric CT58 series turboshaft engines which require removal of certain compressor rear shafts.

A TRIBUTE TO THE FORGOTTEN MECHANIC

Through the history of world aviation many names have come to the fore....
Great deeds of the past in our memory will last, as they're joined by more and more....

When man first started his labor in his quest to conquer the sky he was designer, mechanic, and pilot, and he built a machine that would fly....

But somehow the order got twisted, and then in the public's eye the only man that could be seen was the man who knew how to fly....

The pilot was everyone's hero, he was brave, he was bold, he was grand, as he stood by his battered old biplane with his goggles and helmet in hand....

To be sure, these pilots all earned it, to fly you have to have guts....

And they blazed their names in the hall of fame on wings with bailing wire struts....

But for each of these flying heroes there were thousands of little renown, and these were the men who worked on the planes but kept their feet on the ground....

We all know the name of Lindbergh, and we've read of his flight to fame....

But think, if you can, of his maintenance man, can you remember his name?

And think of our wartime heroes, Gabreski, Jabara, and Scott....

Can you tell me the names of their crew chiefs? A thousand to one you cannot....

Now pilots are highly trained people, and wings are not easily won....

But without the work of the maintenance man our pilots would march with a gun....

So when you see mighty aircraft as they mark their way through the air, the grease-stained man with the wrench in his hand is the man who put them there....

The anonymous author of this composition must surely have had an appreciation and respect for those of us past and present who endeavor to promote aviation safety to the highest possible level. We endure the environmental extremes of the flight line and are content to allow those who are pilots to reap the glory of the public eye. We are content to remain in the background with the calm assurance that we have given our all in the pursuit of safety in aviation. We swell with pride as we watch the product of our labor rise gracefully from the runway and embrace a pristine sky.

The greatest and most valued recognition we can hope to receive comes from our peers and from within. The Aviation Awards Program, started recently by the FAA, has become one of the most coveted forms of recognition for maintenance personnel. Its rewards are not easily attained, and only those individuals with uncompromising and long-suffering moral and ethical values are found worthy. This program stresses education, training, and superior performance as well as the other attributes mentioned here, to praise those worthy of its tests. Our most valued assets are the tools of our trade, our reputation, integrity, and the respect of our customers who put their lives in our hands.

With the many technological and sociological advances in aviation over the years, many of the ideas put forth in this poem are no longer valid. For example, “bailing wire” is very much frowned upon as wing strut and hinge pin material. For the most part, maintenance personnel no longer fit the stereotype of a “grease-stained man.” The stereotype has been distorted and propagated by the entertainment media. The “grease-stained man” with a rag hanging from his pocket, a cap with a “turned-up bill,” and a “less than intelligent look on his face,” is purely a fictional character conjured to provide contrast and further embellish the flyer. Also, not all maintenance men are men; there are many women who have earned a position among our ranks and have made significant contributions to aviation maintenance safety.

Through the evolution of aviation maintenance, the requirements of brawn has been replaced by an ever-expanding requirement for brain power. With the complex nature of today's aeronautical products, has come maintenance people who can analyze, forecast, and troubleshoot problems by use of the computer. (Usually, we don't get “grease stained” from this activity.) The ever-changing demands of maintaining today's aircraft present a new challenge each day. These challenges are met with an eager enthusiasm to learn something new and to “put things right.” We approach each new challenge with a proud and confident demeanor which seems to say, “you can't break anything that I can't fix!”

This article was originally published in the October 1994, edition of this periodical and is reprinted for the benefit of those who may have missed the previous printing.

ALERTS ONLINE

This publication is now available through the FedWorld Bulletin Board System (BBS), via the Internet.

You may directly access the FedWorld BBS at telephone number (703) 321-3339. To access AC 43-16, General Aviation Airworthiness Alerts, through the Internet, use the following address: "http://www.fedworld.gov/ftp.htm". This will open the "FedWorld File Transfer Protocol Search And Retrieve Service" screen. Page down to the heading "Federal Aviation Administration" and select "FAA-ASI". The file names will begin with "ALT", followed by three characters for the month, followed by two digits for the year (e.g. "ALTJUN96.TXT"). The extension "TXT" indicates the file is viewable on the screen and also available for download.

In July 1996, we began using the Adobe Acrobat software program format to upload this monthly publication. Since that time, the "ALT" files now appear with a "PDF" extension, and it is necessary to download the files for viewing. This change was necessary to accommodate inclusion of the illustrations associated with various articles. The Adobe Acrobat Viewer is available for download from the Internet (free of charge) and will allow the files to be read.

Also available at this location are the Service Difficulty Reports (SDR's) for the past 2 months, which may be of interest.

The Regulatory Support Division (AFS-600) has established a "HomePage" on the Internet, through which the same information is available. The Internet address for the AFS-600 "HomePage" is: "http://www.mmac.jccbi.gov/afs/afs600". Also, this address has a large quantity of other information available. There are "hot buttons" to take you to other locations and sites where FAA Flight Standards Service information is available. If problems are encountered, you can "E-mail" us at the following address.

If you wish to contact the staff of this publication, you may do so by any of the means listed below.

Editor: Phil Lomax, AFS-640
Telephone No.: (405) 954-6487
FAX No.: (405) 954-4570
or (405) 954-4748

Internet E mail address:
ga-alerts@mmacmail.jccbi.gov

Mailing Address:
FAA
ATTN: AFS-640 ALERTS
P.O. Box 25082
Oklahoma City, OK 73125-5029

We hope this will allow you to contact us by a means which will be convenient and save some of your time. We welcome the submission of aircraft maintenance information via any form or format. This publication provides an opportunity for you to inform the general aviation community of problems you have encountered as well as bringing them to the attention of those who can resolve these problems. Your participation in the Service Difficulty Program reporting process is vital to ensure accurate maintenance information is available to the general aviation community.

ELECTRONIC AVAILABILITY OF INFORMATION

In light of the previous article, we solicit your input and ideas for the future of this publication. The electronic information media has made available a vast amount of information in a more expedient and efficient

manner. We believe the expanded use of this media can bring about the conveyance of safety information in a more efficient and timely manner.

We are currently distributing approximately 28,000 printed copies of this publication each month, and the distribution number continues to increase. The cost for publishing, printing, and mailing this publication has also increased, and there has been a substantial negative impact on our budget allotment.

In an effort to save tax dollars and make better use of the electronic media, we encourage our readers to cancel their printed copy subscription to this publication and use the computer to download the monthly issues. (The instructions for downloading the Alerts were given in the preceding article.) We will be happy to help you if you require further assistance. Some of you may not yet have the equipment necessary to receive the information electronically, and you are welcome to continue receiving it in the printed form.

There have been some efforts to charge an annual subscription fee for this publication. So far, these efforts have not been given much credence. We will make every effort to keep this a free-of-charge publication. However, we need your input and ideas. Would you be willing to pay a nominal subscription charge for this publication?

We appreciate your interest in this publication and the opportunity to serve you. Please offer any comments, questions, or suggestions to us via any of the means listed in the preceding article.

PROPOSED CHANGES TO THE FAA SERVICE DIFFICULTY PROGRAM

A change to the FAA Service Difficulty Program (SDP) has been proposed which all of those having an interest in general aviation should be aware of.

The proposed changes were recommended by a joint FAA/industry committee and were published in the Federal Register, Volume 60, No. 156, Monday, August 14, 1995, as Notice Of Proposed Rulemaking (NPRM) number 95-12. Subsequent to that action, a Supplemental Notice Of Proposed Rulemaking (SNPRM) was published in the Federal Register, Volume 62, No. 177, Friday, September 12, 1997, which is intended to update and improve the SDP reporting system to effectively collect and disseminate clear and concise information to the aviation industry. The originally proposed action was prompted by an internal FAA review of the effectiveness of the SDP reporting system and by concerns of the air carrier industry regarding the quality of the data being reported by air carriers.

The changes proposed would delete the present FAA Form 8010-4, Malfunction or Defect Report, and revise FAA Form 8070-1, Service Difficulty Report which would be used for both large (air carrier) and general aviation aircraft. For over 25 years, FAA Form 8010-4 has been the principal means of voluntary reporting of aviation service information for input into the SDP data base.

For the most part, those involved in general aviation have voluntarily reported service information and have been encouraged by the FAA and aviation organizations in that effort. The information supplied is entered into the FAA (SDP) data base. This data base is a source of information used by the FAA, manufacturers, and the aviation public for research, analysis, design changes, service bulletins, airworthiness directives, and many other vital purposes. The general aviation community needs to be aware of this effort, educate themselves to all the implications, and make their opinion known by any and all means at their disposal during the comment period for the SNPRM.

The revised FAA Form 8070-1 is a reconstruction of the previous form used by operators of large aircraft. This proposal would require all certificated operators, who are required to report service information, to

change their operating manuals to include the revised reporting form.

In the past, information from those who voluntarily report service data has come from individuals with a sincere desire to improve general aviation safety. Service information for those not required to report has been and will continue to be received in any form or format. The current supply of FAA Form 8010-4, as well as the supply now distributed, should last for several years. These forms may be reproduced and used as necessary, and reports in letter, or any other, format are welcome.

The Service Difficulty Program data base contains service information dating back to 1974 for both small and large aircraft. This information is made available to the public on request and is a valuable research tool for those who use the system. Information used for this publication is totally dependent on the voluntary submission of service difficulty reports offered by those of you in general aviation who are truly concerned and motivated to improve safety by making your experiences and information available to everyone who may operate a like aircraft.

SUSPECTED UNAPPROVED PARTS SEMINAR

As announced in previous editions of the Alerts, the Designee Standardization Branch, AFS-640, will begin presenting the Suspected Unapproved Parts Seminar. The first seminar will be held on January 14, 1998, in Sacramento, California. The second seminar will be held on January 28, 1998, in Fort Worth, Texas.

Additional seminar dates will be announced in the Alerts, the Designee Update Newsletter, and on the Internet under FedWorld.gov. You may access the FedWorld BBS directly at (703) 321-3339. You may access the Alerts through the Internet, using the Regulatory Support Division, AFS-600, “HomePage” at the following address.

http://www.mmac.jccbi.gov/afs/afs600

The seminar will discuss the following:

1. What is an approved part?
2. How can approved parts be produced?
3. What is a suspected unapproved part?
4. How is a suspected unapproved part reported in accordance with FAA Order 8120.10A, Suspected Unapproved Parts Program, and utilizing FAA Form 8120-11, Suspected Unapproved Parts Notification?

The cost of this 8-hour seminar will be $60. The seminar may be used for the Inspector Authorization (IA) renewal training requirement contained in Title 14 of the Code of Federal Regulations (14 CFR) part 65, section 65.93(a)(4).

The seminar is open to the aviation industry. Anyone wishing to attend may telephone (405) 954-0138. Payment is required in advance by using VISA, MasterCard, or a check.

FAA FORM 8010-4, MALFUNCTION OR DEFECT REPORT

For your convenience, FAA Form 8010-4, Malfunction or Defect Report, will be printed in every issue of this publication.

You may complete the form, fold, staple, and return it to the address printed on the form. (No postage is required.)

SUBSCRIPTION REQUEST FORM

For your convenience, a Subscription Request Form for AC 43-16, General Aviation Airworthiness Alerts, is printed in every issue.

If you wish to be placed on the distribution list, complete the form, and return it, in a stamped envelope, to the address shown on the form.

OMB No. 2120-0003

DEPARTMENT OF TRANSPORTATION
FEDERAL AVIATION ADMINISTRATION

MALFUNCTION OR DEFECT REPORT

OPER. Control No.	
ATA Code	
1. A/C Reg. No.	N-

Enter pertinent data	MANUFACTURER	MODEL/SERIES	SERIAL NUMBER
2. **AIRCRAFT**			
3. **POWERPLANT**			
4. **PROPELLER**			

5. SPECIFIC PART (of component) CAUSING TROUBLE

Part Name	MFG. Model or Part No.	Serial No.	Part/Defect Location.

6. APPLIANCE/COMPONENT (*Assembly that includes part*)

Comp/Appl Name	Manufacturer	Model or Part No.	Serial Number

Part TT	Part TSO	Part Condition	7. Date Sub.

8. Comments (*Describe the malfunction or defect and the circumstances under which it occurred. State probable cause and recommendations to prevent recurrence.*)

Optional Information:

Check a box below, if this report is related to an aircraft

☐ Accident; Date _____ ☐ Incident; Date _____

DISTRICT OFFICE	OPERATOR DESIGNATOR
OTHER	
COMMUTER	
FAA	
UPS	—
AIR TAXI	( )
LESOR	(
OPER.	WRITTEN BY:
REP. AVIA.	TELEPHONE NUMBER:

FAA Form 8010-4 (10-92) SUPERSEDES PREVIOUS EDITIONS

Use this space for continuation of Block 8 (*if required*).

U.S. Department
of Transportation

**Federal Aviation
Administration**

Flight Standards Service
Designee Standardization Branch
P.O. Box 25082
Oklahoma City, OK 73125-5029

AFS-640

Official Business
Penalty for Private Use $300

NO POSTAGE
NECESSARY
IF MAILED
IN THE
UNITED STATES

BUSINESS REPLY MAIL

FIRST CLASS PERMIT NO. 12438 WASHINGTON, D.C.

**Federal Aviation Administration
AFS-640 (Alerts)
P.O. Box 25082
Oklahoma City, OK 73125-5029**

SUBSCRIPTION REQUEST FORM

ADVISORY CIRCULAR (AC) 43-16, GENERAL AVIATION AIRWORTHINESS ALERTS

Please use this request to subscribe to AC 43-16 or to change your address if you are presently on the mailing list. Once your name has been entered, you will continue to receive this publication until you request your name be removed or a copy is returned because of an incorrect address.

Because this mailing list is independent of other FAA mailing lists, it is necessary that you notify us when your address changes. (Our address is on the following subscription request.) If you are presently receiving this publication it is **NOT** necessary to send another subscription request. The following subscription request may be duplicated, as necessary. **TELEPHONE REQUESTS WILL ALSO BE ACCEPTED; THE TELEPHONE NUMBER IS (405) 954-6487. THE FAX NUMBERS ARE: (405) 954-4748 and/or (405) 954-4570.**

AC 43-16 SUBSCRIPTION REQUEST

If you would like to **BEGIN** receiving AC 43-16, or **CHANGE** your address, please complete the following:

PLEASE PRINT INFORMATION LEGIBLY, INCLUDE YOUR ZIP CODE, AND THE DATE OF YOUR REQUEST.

NAME:_____

ADDRESS:_____

_____

_____

ZIP CODE_____

DATE:_____

CIRCLE ONE OF THE FOLLOWING:

1. This is a **NEW** subscription.
2. This is an **ADDRESS CHANGE**.

SEND **ONLY ONE** SUBSCRIPTION REQUEST TO THE FOLLOWING ADDRESS:

FAA, Regulatory Support Division
ATTN: AFS-640 (Phil Lomax)
P.O. Box 25082
Oklahoma City, OK 73125-5029

If you require more than one copy of AC 43-16, it may be reproduced.

U.S.Department
of Transportation

Federal Aviation Administration

Designee Standardization Branch
ATTN: ALERTS, AFS-640
P.O. Box 25082
Oklahoma City, OK 73125-5029

AFS-640

Official Business
Penalty for Private Use $300

BULK MAIL
POSTAGE & FEES PAID
Federal Aviation Administration
PERMIT No. G44